Met.O.806

METEOROLOGICAL OFFICE

Scientific Paper No. 28

Numerical Solution of Atmospheric Diffusion Equations

by C. E. WALLINGTON, M.Sc.

LONDON: HER MAJESTY'S STATIONERY OFFICE

PRICE 6s. 6d. NET

Met.O.806

METEOROLOGICAL OFFICE

Scientific Paper No. 28

Numerical Solution of Atmospheric Diffusion Equations

by C. E. WALLINGTON, M.Sc.

LONDON

HER MAJESTY'S STATIONERY OFFICE

1968

U.D.C.: 551·501·45:
551·511·6:
517·942·82

Met.0.806 *Scientific Paper No.* 28

NUMERICAL SOLUTION OF ATMOSPHERIC DIFFUSION EQUATIONS

CORRECTION

Page 8, Section 4.1.3., line 2: for 'C_{-1} is a constant, C_{-1}' read 'C_{-1} is a constant, C'_{-1}'.

Page 9, Equation (30): for '$+\frac{C}{p}$' read '$+\frac{c}{p}$'.

Page 34, Figure 8: add below figure caption 'The linear distributions assumed at each side of L are not the same; the concentration decreases to zero on one side at distance a_1 and on the other at distance a_2.'

LONDON
HER MAJESTY'S STATIONERY OFFICE

Contents

Summary .. 1
1. Introduction .. 1
2. The basic model .. 2
2.1. The two-dimensional diffusion régime .. 2
2.2. Errors in the finite-difference approximation .. 3
2.3. The impervious boundary assumption .. 4
3. The Laplace transform equations .. 4
4. Solutions by the Laplace transform technique .. 5
4.1. The basic two-dimensional model .. 5
4.1.1. The solutions .. 5
4.1.2. The nature of the two-dimensional solutions .. 6
4.1.3. Diffusion from a surface .. 8
4.1.4. Methods of computing the solutions .. 10
4.2. Extension to three dimensions .. 10
4.2.1. The three-dimensional solutions .. 10
4.2.2. The nature of the three-dimensional solutions .. 13
4.2.3. Application to the instantaneous line source .. 21
4.2.4. Calculation of dosages .. 21
4.2.4.1. Dosages from an instantaneous line source .. 21
4.2.4.2. Dosages from a short plume .. 23
5. Solutions by analogue computing .. 24
6. Solutions by numerical prediction .. 24
6.1. Stability and accuracy .. 24
6.2. The computing time .. 26
7. A more general form of the equations .. 27
8. The computing procedure .. 29
9. Assumed forms of distribution .. 29
9.1. Symmetrical distributions .. 29
9.2. Asymmetrical distributions .. 30
9.3. Sources of finite dimensions .. 31
10. Vertical motion and deposition .. 34
10.1. Magnitude restriction .. 34
10.2. Application to a visibility problem .. 35
10.3. Application to clouds of falling particles .. 35
11. Estimation of the diffusion coefficients .. 36
12. Summary of computing methods .. 37
Bibliography .. 38

Numerical Solution of Atmospheric Diffusion Equations

by C. E. Wallington, M.Sc.

SUMMARY

This paper discusses techniques of solving atmospheric diffusion equations analytically with the aid of Laplace transforms and numerically with the aid of moments and a high-speed computer. The techniques allow a wide range of wind and diffusion coefficient profiles to be accommodated in finite-difference form in the vertical, and finite sources of material emitted into the atmosphere can be dealt with by convenient distributions other than Gaussian.

1. INTRODUCTION

The use of diffusion equations, to calculate the variations in time and space of material transported and diffused in the atmosphere, poses three questions, namely:

(i) Are the equations valid?
(ii) What are the diffusion coefficients?
(iii) How can the equations be solved?

Theoretical justification for the equations is often rather sketchy and their validity is often assessed by experience in attempting to apply them to observations. The magnitude and behaviour of diffusion coefficients are also assessed mainly by making the calculations fit the observed data. But if the equations are simplified, before the calculations are made, the simplification may well have more influence on the apparent comparison of calculations and observations than the choice of diffusion coefficients or the validity of the original equations.

Simplification of the atmospheric diffusion equations is usually achieved by assuming special distributions of wind velocity and eddy diffusivity with height, so that the equations can be solved analytically. A common simplification is to neglect the wind shear with height. But experimental assessment of the first two questions requires a computing method which can be applied to any specified vertical distributions of the airstream parameters.

The purpose of this paper is to discuss methods of computing the solutions for a wide range of airstream conditions. It will be assumed that the usual diffusion equations are valid for all but very short-range diffusion and that the choice of diffusion coefficients is an incidental rather than a principal concern of this paper. Sections 3 and 4 of this paper describe an analytical method of solving the equations. This method is useful for examining the nature of the solutions and for isolating various factors that contribute to dispersion. It can also be used to obtain numerical solutions but the computing difficulties are considerable for problems with more than two dimensions in time and space.

The subsequent sections describe a method of obtaining numerical solutions to practical problems associated with the transport and dispersion of airborne material from various types of sources.

The main questions here are:

(i) What are the computing methods?
(ii) Are they practicable with the aid of high-speed computers?
(iii) Can we glean any useful information from the nature of solutions?
(iv) Can the methods be extended to include such factors as changing airstream conditions, variable diffusion coefficients, vertical velocities and a variety of real sources?

Examples of computations made by the method described are not shown here, as the techniques are presented more as a framework on which to build more-sophisticated atmospheric diffusion models for numerical work rather than as a finalized version of a computing system.

2. THE BASIC MODEL

2.1. The two-dimensional diffusion régime

The diffusion model used in the computing methods to be described, is based on the assumption that the atmospheric region in which the diffusion takes place can be divided into a number of layers, r, shallow enough to justify the use of finite differences for vertical derivatives in the diffusion equation. More specifically, if the wind speeds, u, eddy diffusion coefficients, K, and concentrations, C, of diffused material are as shown in Figure 1,

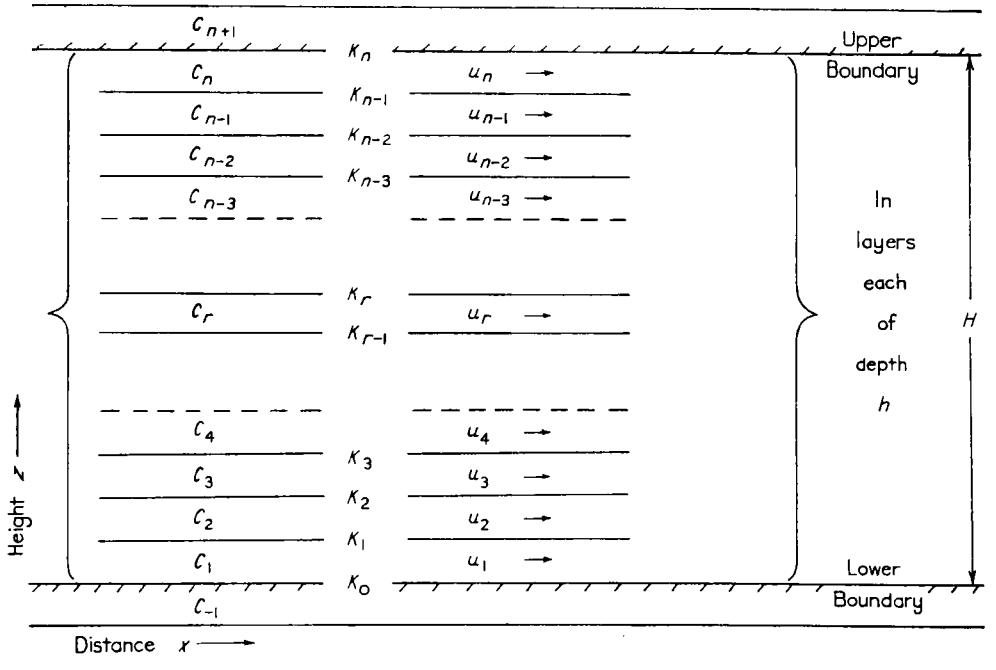

FIGURE 1. The diffusion régime.
Distance, x, from source is measured in the along-wind direction. Concentrations are given for $x = 0$ and are to be computed for $x = X > 0$. C_{-1}, K_0, C_{n+1} and K_n are to be specified to fit prescribed boundary conditions. H = depth of diffusion régime.

then a satisfactory approximation to the equation for, say, steady diffusion from a cross-wind line source of infinite extent is

$$u_r \frac{\partial C_r}{\partial x} = [K_r C_{r+1} - (K_r + K_{r-1})C_r + K_{r-1}C_{r-1}] \frac{1}{h^2}. \qquad \ldots(1)$$

Here the subscripts for u, C and K denote levels or layers according to the scheme indicated in Figure 1, h denotes the layer depth and $\partial/\partial x$ is the partial differential coefficient in the 'along-wind' direction.

2.2. Errors in the finite-difference approximation

There is no simple method of calculating the net errors due to using finite differences in the vertical. (If there were, then it would not be necessary to resort to the finite-difference approximation.) The error in each second derivative may be assessed as follows: concentrations at levels $r+1$ and $r-1$ can be written in the form

$$C_{r+1} = C_r + \frac{h}{1!}\left(\frac{\partial C}{\partial z}\right)_r + \frac{h^2}{2!}\left(\frac{\partial^2 C}{\partial z^2}\right)_r + \frac{h^3}{3!}\left(\frac{\partial^3 C}{\partial z^3}\right)_r + \frac{h^4}{4!}\left(\frac{\partial^4 C}{\partial z^4}\right)_r + \cdots, \qquad \ldots(2)$$

$$C_{r-1} = C_r - \frac{h}{1!}\left(\frac{\partial C}{\partial z}\right)_r + \frac{h^2}{2!}\left(\frac{\partial^2 C}{\partial z^2}\right)_r - \frac{h^3}{3!}\left(\frac{\partial^3 C}{\partial z^3}\right)_r + \frac{h^4}{4!}\left(\frac{\partial^4 C}{\partial z^4}\right)_r - \cdots, \qquad \ldots(3)$$

where $\partial/\partial z$ is the partial differential coefficient in the vertical direction. Therefore,

$$\left(\frac{\partial^2 C}{\partial z^2}\right)_r \simeq \frac{C_{r+1} - 2C_r + C_{r-1}}{h^2} - \frac{2h^2}{4!}\left(\frac{\partial^4 C}{\partial z^4}\right)_r \qquad \ldots(4)$$

and the error involved in the finite difference used is seen to be approximately

$$\left(\frac{h^2}{12}\right)\left(\frac{\partial^4 C}{\partial z^4}\right)_r$$

for each second derivative.

It is apparent that h must be kept as small as possible and that errors are particularly likely to occur close to a point source but there is no convenient criterion for choosing a value of h for any particular problem. Errors in the results of a computation may be assessed approximately by computing fourth-order differences based on the results themselves but in general the best method of choosing h is by experience; a computation can be repeated by using successively smaller values of h until any further reduction appears to have negligible effect on the solution; or known analytical solutions of special cases may be used as a test of the finite-difference method. Tyldesley and Wallington[1]* have used analogue and digital computers to apply the methods described in this paper. Comparison of their calculations with known analytical solutions of special cases indicates that in a seven-layer model the finite-difference errors are less than 3 per cent at distance of about $4uh^2/K$ and more, where u and K are the representative wind speed and vertical diffusion coefficient, respectively. For a 30-layer model this 3 per cent accuracy is attained at a distance of about uh^2/K.

* The superscript figures refer to the bibliography on p. 38.

It is inadvisable to use higher-difference formulae in the original calculations, since this not only entails more-detailed boundary specifications but also amounts to replacing the original differential equations by equations of higher order and may introduce spurious detail into the solution.

2.3. The impervious boundary assumption

In many practical problems it is convenient and justifiable to assume that the ground acts as a perfect 'reflector' of the diffused material, while a stable layer aloft acts as a 'lid' on the diffusion process. This is tantamount to taking K_0 and K_n as zero. Thus:

$$u_n \frac{\partial C_n}{\partial x} = K_{n-1}(C_{n-1} - C_n)\left(\frac{1}{h^2}\right) \quad \ldots(5)$$

and

$$u_1 \frac{\partial C_1}{\partial x} = K_1(C_2 - C_1)\left(\frac{1}{h^2}\right). \quad \ldots(6)$$

If other types of boundary conditions are assumed, the computing methods described are not radically altered, so, unless otherwise stated, K_0 and K_n are taken to be zero in the subsequent sections.

3. THE LAPLACE TRANSFORM EQUATIONS

One method of solution of the finite-difference equations involves the use of the Laplace transform, which may be described as follows: if C is a function of x for values of $x > 0$, then the Laplace transform $\bar{C}$ of C is defined as

$$\bar{C} = \int_0^\infty C \exp(-px)\, dx, \quad \ldots(7)$$

where p is a number sufficiently large to make the integral convergent.

In the equations which follow, Laplace transforms are always denoted by a bar over the transformed function.

It can be shown that, if C is continuous and tends to C' as x tends to zero, then

$$\left(\frac{d\bar{C}}{dx}\right) = p\bar{C} - C'. \quad \ldots(8)$$

Also, if $\bar{C} = f(p)/g(p)$, where $f(p)$ and $g(p)$ are polynomials in p and the degree of $f(p)$ is less than that of $g(p)$, and if the roots, $\alpha_1, \alpha_2, \alpha_3, \ldots \alpha_m, \ldots \alpha_n$, of $g(p) = 0$ are all different, then the function, C, whose Laplace transform is $\bar{C}$, is given by

$$C = \sum_{m=1}^{n} \left\{\frac{(p-\alpha_m)f(p)}{g(p)}\right\}_{p=\alpha_m} \exp(\alpha_m x). \quad \ldots(9)$$

If, instead of the roots being all different, $g(p) = 0$ has a repeated root, $\alpha_1 = \alpha_2$, then the terms corresponding to α_1 and α_2 must be replaced by

$$\left\{\frac{(p-\alpha_1)^2 f(p)}{g(p)}\right\}_{p=\alpha_1} x \exp(\alpha_1 x) + \left\{\frac{d}{dp}\left[\frac{(p-\alpha_1)^2 f(p)}{g(p)}\right]\right\}_{p=\alpha_1} \exp(\alpha_1 x) \quad \ldots(10)$$

and for a twice-repeated root, $\alpha_1 = \alpha_2 = \alpha_3$, the three corresponding terms are

$$\frac{d^s}{dp^s}\left[\frac{(p-\alpha_1)^3 f(p)}{g(p)}\right]_{p=\alpha_1} \frac{x^{2-s}}{s!(2-s)!}\exp(\alpha_1 x), \qquad \ldots(11)$$

with $s = 0, 1, 2$.

4. SOLUTIONS BY THE LAPLACE TRANSFORM TECHNIQUE

4.1. The basic two-dimensional model

4.1.1. *The solutions*

If we write down the Laplace transforms of equations (5), (6) and (1) applied to all intermediate levels, and take the initial conditions at $x = 0$ as a concentration C_s' in the layer s, we obtain the n equations

$$\begin{aligned}
P_n\bar{C}_n + k_{n-1}\bar{C}_{n-1} &= 0\\
k_{n-1}\bar{C}_n + P_{n-1}\bar{C}_{n-1} + k_{n-2}\bar{C}_{n-2} &= 0\\
\text{----------}\quad & \\
k_s\bar{C}_{s+1} + P_s\bar{C}_s + u_sC_s' + k_{s-1}\bar{C}_{s-1} &= 0\\
\text{----------}\quad & \\
k_2\bar{C}_3 + P_2\bar{C}_2 + k_1\bar{C}_1 &= 0\\
k_1\bar{C}_2 + P_1\bar{C}_1 &= 0
\end{aligned} \qquad \ldots(12)$$

where $k_r = K_r/h^2$ and $P_r = -(pu_r + k_r + k_{r-1})$, with $k_0 = k_n = 0$.

To determine the variation of, say, C_r with x, we can find $\bar{C}_r$ in terms of p from these n simultaneous equations and then use the inversion formula of equation (9) to obtain C_r as a function of x.

Eliminating all the transformed concentrations except $\bar{C}_r$ from equations (12) we get

$$\left|\begin{array}{cccc|c|ccc}
P_n & k_{n-1} & 0 & 0 & 0 & 0 & 0 & 0\\
k_{n-1} & P_{n-1} & k_{n-2} & 0 & 0 & 0 & 0 & 0\\
0 & k_{n-2} & P_{n-2} & k_{n-3} & 0 & 0 & 0 & 0\\
\hline
0 & 0 & 0 & 0 & k_r\bar{C}_r & 0 & 0 & 0\\
0 & 0 & 0 & 0 & P_r\bar{C}_r & 0 & 0 & 0\\
0 & 0 & 0 & 0 & k_{r-1}\bar{C}_r & 0 & 0 & 0\\
\hline
0 & 0 & 0 & 0 & u_sC_s' & 0 & 0 & 0\\
\hline
0 & 0 & 0 & 0 & 0 & k_2 & P_2 & k_1\\
0 & 0 & 0 & 0 & 0 & 0 & k_1 & P_1
\end{array}\right| = 0. \qquad \ldots(13)$$

This may be rearranged to form the determinant equation

$$D(P_n)\bar{C}_r = D(uC')_r , \qquad \ldots(14)$$

where

$$D(P_n) = \left|\begin{array}{ccc:ccc} P_n & k_{n-1} & 0 & 0 & 0 & 0 \\ k_{n-1} & P_{n-1} & k_{n-2} & 0 & 0 & 0 \\ \hdashline 0 & 0 & 0 & k_2 & P_2 & k_1 \\ 0 & 0 & 0 & 0 & k_1 & P_1 \end{array}\right|$$

and $D(uC')_r$ is the same as $D(P_n)$ except that the rth column from the right-hand side of the determinant is replaced by $-u_s C_s'$ in the sth row from the bottom and by zeros in the remainder of the column. This type of determinant notation is convenient for our purpose and will be used again.

$D(P_n)$ and $D(uC')_r$ are polynomials in p; the former being of degree n, while the latter is of degree $n-1$ if $r = s$, or $n-2$ if $r \neq s$.

By appropriate multiplication of rows and columns by square roots of the wind speeds, $D(P_n)$ may be written as a product of p and a symmetrical determinant of order $n-1$ whose leading elements are all of the form

$$-\left(p+\frac{k_r+k_{r-1}}{u_r}\right).$$

A property of such a determinant is that when equated to zero all its roots are real and different, therefore, C_r as a function of x may be determined by finding the roots of $D(P_n) = 0$ and using equation (9).

4.1.2. *The nature of the two-dimensional solutions*

The conditions at $x = 0$ need not be limited to a concentration of material in one layer only; initial conditions of, say, C_1', C_2' . . . C_n' can be accommodated by forming $D(uC')_r$ from $D(P_n)$ with the rth column from the right replaced by

$$\begin{array}{l} -u_n C_n' \\ -u_{n-1} C'_{n-1} \\ \vdots \\ -u_1 C_1'. \end{array}$$

The solutions obtained are necessarily consistent with the facts that as $x \to \infty$ the concentration tends to become uniform with height and that there is no loss of material through the boundaries.

To prove the first fact, it is easily shown (by adding all the rows of the determinant $D(P_n)$ together) that $p = 0$ is a root of $D(P_n) = 0$. Therefore, as $x \to \infty$ the concentration in layer r becomes

$$C_r = \left[\frac{pD(uC')_r}{D(P_n)}\right]_{p=0}. \qquad \ldots(15)$$

If we write the sum of the rows of $D(P_n)$ in the top row and extract the factor $-p$, we get

$$D(P_n) = -p \begin{vmatrix} u_n & u_{n-1} & u_{n-2} & u_3 & u_2 & u_1 \\ k_{n-1} & P_{n-1} & k_{n-2} & 0 & 0 & 0 \\ 0 & 0 & 0 & k_2 & P_2 & k_1 \\ 0 & 0 & 0 & 0 & k_1 & P_1 \end{vmatrix} \quad \ldots(16)$$

and if we now substitute the sum of all the columns in the rth column from the right and put $p = 0$ in this column, we get

$$-\left[\frac{D(P_n)}{p}\right]_{p=0} = \begin{vmatrix} u_n & u_{n-1} & u_{n-2} & \sum_{s=1}^{n} u_s & u_3 & u_2 & u_1 \\ k_{n-1} & P_{n-1} & k_{n-2} & 0 & 0 & 0 & 0 \\ 0 & 0 & 0 & 0 & k_2 & P_2 & k_1 \\ 0 & 0 & 0 & 0 & 0 & k_1 & P_1 \end{vmatrix}_{p=0}$$

$$= \left[\sum_{s=1}^{n} u_s\right] \text{ times its cofactor.} \quad \ldots(17)$$

$D(uC')_r$ can also be rearranged into the form

$$-[D(uC')_r]_{p=0} = \begin{vmatrix} 0 & 0 & 0 & \sum_{s=1}^{n} (u_s C_s') & 0 & 0 & 0 \\ k_{n-1} & P_{n-1} & k_{n-2} & u_{n-1}C'_{n-1} & 0 & 0 & 0 \\ 0 & 0 & 0 & u_2 C_2' & k_2 & P_2 & k_1 \\ 0 & 0 & 0 & u_1 C_1' & 0 & k_1 & P_1 \end{vmatrix}_{p=0}$$

$$= \left[\sum_{s=1}^{n} (u_s C_s')\right] \text{ times its cofactor.} \quad \ldots(18)$$

As the cofactors in these two equations are identical, we have

$$C_r = \frac{\sum_{s=1}^{n} (u_s C_s')}{\sum_{s=1}^{n} u_s} = \frac{\text{mean initial flux}}{\text{mean wind speed}} \quad \ldots(19)$$

for all values of r. Therefore, taking the root $\alpha_1 = 0$, the complete solution for C_r may be written

$$C_r = \frac{\sum_{s=1}^{n} (u_s C_s')}{\sum_{s=1}^{n} u_s} + \sum_{m=2}^{n} \left[\frac{(p-\alpha_m)\mathrm{D}(uC')_r}{\mathrm{D}(P_n)}\right]_{p=\alpha_m} \exp(\alpha_m x). \quad \ldots(20)$$

The flux of diffused material across any vertical cross-wind plane of unit cross-wind width is given by

$$\sum_{r=1}^{n} (u_r C_r) = \sum_{s=1}^{n} (u_s C_s') + \sum_{m=2}^{n} \left[\frac{(p-\alpha_m)}{\mathrm{D}(P_n)} \sum_{r=1}^{n} u_r \mathrm{D}(uC')_r\right]_{p=\alpha_m} \exp(\alpha_m x). \quad \ldots(21)$$

Appropriate addition of rows and columns in the determinants $\mathrm{D}(uC')_r$ shows that

$$\sum_{r=1}^{n} u_r \mathrm{D}(uC')_r = \left[\frac{\mathrm{D}(P_n)}{p}\right] \sum_{r=1}^{n} u_r C_r'. \quad \ldots(22)$$

Thus the second term on the right-hand side of equation (21) is zero and the horizontal flux is constant (equal, of course, to the rate of dissemination of material at $x = 0$).

Another necessary fact is that all the roots of $\mathrm{D}(P_n)$, other than the zero root, should be negative; a positive root would imply that the concentrations increase indefinitely with increasing value of x.

Let us write $\mathrm{D}(P_r)$ for the determinant formed by the bottom r rows and right-hand r columns of $\mathrm{D}(P_n)$. Then

$$\left.\begin{aligned}
\mathrm{D}(P_1) &= -(pu_1+k_1) && < 0 \\
\mathrm{D}(P_2) &= -(pu_2+k_2)\mathrm{D}(P_1)+pu_1k_1 && > 0 \\
\mathrm{D}(P_3) &= -(pu_3+k_3)\mathrm{D}(P_2)+pu_2k_2\mathrm{D}(P_1)-pu_1k_1k_2 && < 0 \\
\mathrm{D}(P_4) &= -(pu_4+k_4)\mathrm{D}(P_3)+pu_3k_3\mathrm{D}(P_2)-pu_2k_2k_3\mathrm{D}(P_1)+pu_1k_1k_2k_3 && > 0 \\
&\text{etc.}
\end{aligned}\right\} \begin{array}{l}\text{for } p > 0 \\ \text{(assuming all} \\ u\text{'s and } k\text{'s} \\ \text{positive)}\end{array} \quad \ldots(23)$$

Thus all the roots of $\mathrm{D}(P_n) = 0$, other than the zero root, are negative, if all the u's and k's are positive.

4.1.3. *Diffusion from a surface*

To deal with diffusion from a surface of infinite cross-wind extent and width X we can suppose that, in the lower external boundary layer in Figure 1, C_{-1} is a constant, C_{-1}, over the interval $0 < x < X$. For computation in this interval, $0 < x < X$, the Laplace transform of C_{-1} is given by

$$\bar{C}_{-1} = \frac{C_{-1}'}{p} \quad \ldots(24)$$

and the transform of the diffusion equation at the lower boundary becomes

$$k_1\bar{C}_2 + P_1\bar{C}_1 + \frac{k_0}{p} C_{-1}' = 0, \quad \ldots(25)$$

where k_0 now has some specified value.

The equation for C_r has the same form as equation (14) but now $(k_0C'_{-1})/p$ is subtracted from the internal boundary value $-uC_1'$ in the bottom row of $\mathrm{D}(uC')_r$, i.e. if we include this lower boundary condition in the notation $\mathrm{D}(uC')_r$, we have

$$\mathrm{D}(P_n)\bar{C}_r = \mathrm{D}(uC')_r = \left|\begin{array}{ccc|c|ccc} P_n & k_{n-1} & 0 & -u_nC_n' & 0 & 0 & 0 \\ k_{n-1} & P_{n-1} & k_{n-2} & -u_{n-1}C_{n-1}' & 0 & 0 & 0 \\ \hline 0 & 0 & 0 & -u_2C_2' & k_2 & P_2 & k_1 \\ 0 & 0 & 0 & -u_1C_1' - \dfrac{k_0}{p}C'_{-1} & 0 & k_1 & P_1 \end{array}\right| \quad \ldots(26)$$

or

$$p\mathrm{D}(P_n)\bar{C}_r = \mathrm{D}(puC')_r. \quad \ldots(27)$$

The equation $p\mathrm{D}(P_n) = 0$ obviously has a zero root, say $\alpha_0 = 0$, and when $p = 0$ the only non-zero term in the initial conditions column of $\mathrm{D}(puC')_r$ is $k_0C'_{-1}$. If the rth column from the right of the determinant $\mathrm{D}(P_n)$ is replaced by the sums of all its columns, it may be shown that, when $p = 0$,

$$\mathrm{D}(P_n) = C'_{-1}\mathrm{D}(uC')_r. \quad \ldots(28)$$

So the solution for C_r may be written in the form

$$C_r = C'_{-1} + \sum_{m=1}^{n}\left[\frac{(p-\alpha_m)\mathrm{D}(uC')_r}{\mathrm{D}(P_n)}\right]_{p=\alpha_m}\exp(\alpha_m x), \quad \ldots(29)$$

where the roots $\alpha_1, \alpha_2, \ldots \alpha_m$ are all real and negative.

[Note that the determinant $\mathrm{D}(uC')_r$ in equations (28) and (29) still includes the boundary term $(k_0/p)C'_{-1}$.]

Computation downwind, from $x = X$ onwards, is continued with whatever new lower-level boundary condition is specified.

With elaboration of the Laplace transform technique, the boundary concentration C'_{-1} can be any specified function of x but the practical computing procedures become extremely complicated for other than a few simple functions. In practice it is found that specified functions are best dealt with by treating them as step functions.

A simple linear function such as $C'_{-1} = Mx + c$ (M and c being constants), whose Laplace transform is

$$\bar{C}'_{-1} = \frac{M}{p^2} + \frac{C}{p}, \quad \ldots(30)$$

can be accommodated by noting that the equation whose roots are to be determined now becomes $p^2\mathrm{D}(P_n) = 0$ and that application of the repeated root formula yields

$$C_r = Mx + \left\{\frac{\mathrm{d}}{\mathrm{d}p}\left[\frac{\mathrm{D}(uC')_r}{\mathrm{D}(P_n)}\right]\right\}_{p=0} + \sum_{m=1}^{n}\left[\frac{(p-\alpha_m)\mathrm{D}(uC')_r}{\mathrm{D}(P_n)}\right]_{p=\alpha_m}\exp(\alpha_m x). \quad \ldots(31)$$

The specification of a concentration at the lower boundary, instead of in the external lower boundary, is obtained by adjusting the atmospheric model so that the lowest layer

is centred on the boundary, or by taking $C_{-1} = 2C_0 - C_1$, where C_0 is the specified boundary value. The latter method usually leaves the equations in a more convenient form for handling.

To apply the two-dimensional diffusion formula to vertical diffusion from a surface of infinite area on which the boundary condition is a specified function of time, the term

$$u\frac{\partial C}{\partial x} \text{ is replaced by } \frac{\partial C}{\partial t} \quad (t = \text{time})$$

and the procedure is similar to that already described, with the simplification that wind speeds are not involved in the calculations.

4.1.4. *Methods of computing the solutions*

The crux of the computing problem is to find the roots of $D(P_n) = 0$. These roots are functions of the airstream conditions only and, once determined, they may be used to obtain solutions for any initial conditions and any layer in the same airstream.

Calculation of the roots with the aid of a high-speed computer is fairly easy, but even without such an aid the computation required may not be too formidable for problems in which the diffusion régime need not be split into more than a few layers. Up to about seven layers may be dealt with by standard procedures (such as root squaring, iteration or matrix methods) for finding the roots of a polynomial. A convenient way of expanding the determinant is to use the relationship

$$D(P_{r+1}) \triangleq P_{r+1}D(P_r) - k_r^2 D(P_{r-1}) \qquad \ldots(32)$$

to build up the polynomial progressively from $D(P_1)$, $D(P_2)$, etc.

In general, the coefficients of the exponential terms are numerically less than the eventual concentrations in each layer (given by equation (19)) and the solutions at large values of x are dominated by terms involving the roots with small numerical values. Therefore, to compute concentrations at long ranges it may not be necessary to determine all the roots of $D(P_n)$; if the smallest roots are computed first, the computations may be stopped when it becomes apparent that further terms will make only a very small contribution to the complete solution.

Most standard procedures for finding the roots of polynomials, however, yield the roots in order of magnitude from the largest root downwards. Therefore, it may be expedient to use an iteration type of procedure, starting with $p = 0$ and simply searching for the roots by evaluating the polynomial with increasing values of p.

4.2. Extension to three dimensions

4.2.1. *The three-dimensional solutions*

In this section let us consider steady diffusion from a continuous point source. The axes and notation to be used are illustrated in Figure 2.

The equation for steady diffusion from a continuous point source can be written

$$u\frac{\partial C}{\partial x} + v\frac{\partial C}{\partial y} = \frac{\partial}{\partial z}\left(K_z\frac{\partial C}{\partial z}\right) + K_y\frac{\partial^2 C}{\partial y^2}, \qquad \ldots(33)$$

where K_y is the coefficient of diffusion parallel to the y axis. In this equation K_y is assumed to be independent of y, but it can be a function of z.

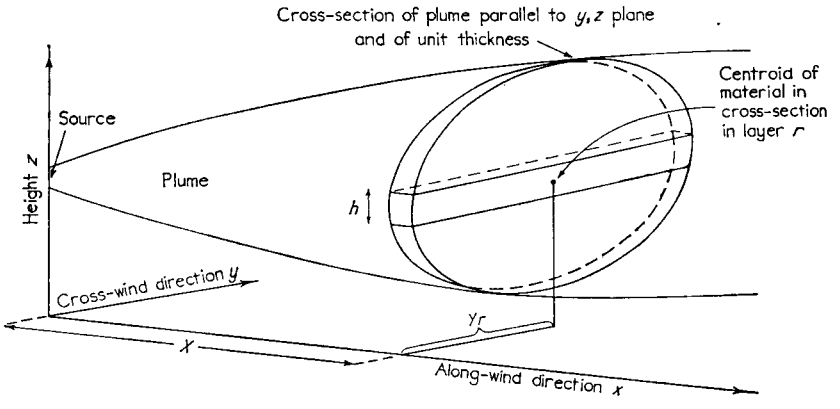

FIGURE 2. Plume cross-section.

Note that this sketch is schematic; the plume is not strictly bounded in the cross-wind direction y.

The y displacement of the centroid of the material in layer r of the cross-section is denoted by Y_r and given by $Y_r = (C_r^1/C_r^0)$. Total amount of material in the layer (of depth h) of the cross-section is given by C_r^0. The standard deviation of the material in the layer of the cross-section is denoted by σ_y, and given by $\sigma_y^2 = (C_r^2/C_r^0) - (Y_r)^2$.

Although it is theoretically possible to solve the equation with the combined aid of Fourier and Laplace transforms, the complete procedure would be too laborious to be practical. However, we can seek solutions for the moments of concentrations which will reveal some of the characteristics of the plume.

Denoting the zero, first and second moments by

$$C^0 = \int_{-\infty}^{\infty} C\,dy, \quad C^1 = \int_{-\infty}^{\infty} yC\,dy \quad \text{and} \quad C^2 = \int_{-\infty}^{\infty} y^2 C\,dy,$$

we have

C^0 = the total amount of material per unit depth in any selected layer,

$\dfrac{C^1}{C^0}$ = the y co-ordinate, Y, of the centroid of material in any selected layer, and

$\left[\dfrac{C^2}{C^0} - \left(\dfrac{C^1}{C^0}\right)^2\right]^{\frac{1}{2}}$ = the standard deviation, σ_y, in the y direction of the material in any selected layer.

Integrating equation (33) with respect to y, from $+\infty$ to $-\infty$, we get

$$u\frac{\partial C^0}{\partial x} = \frac{\partial}{\partial z}\left(K_z\frac{\partial C^0}{\partial z}\right). \qquad \ldots(34)$$

In other words, the equation for the cross-wind integrated concentration is the same as that for steady two-dimensional diffusion from a cross-wind line source of infinite extent, and values of C^0 can be calculated by the method already described.

The first-moment equation is

$$u\frac{\partial C^1}{\partial x} - vC^0 = \frac{\partial}{\partial z}\left(K_z\frac{\partial C^1}{\partial z}\right). \qquad \ldots(35)$$

Applying this equation with finite differences in the vertical to the n-layer diffusion régime and then making the Laplace transforms, we get n equations of the form

$$P_r\bar{C}_r^1+k_{r+1}\bar{C}_{r+1}^1+k_{r-1}\bar{C}_{r-1}^1+u_rC_r^{1\prime}+v\bar{C}_r^0=0, \qquad \ldots(36)$$

where $C_r^{1\prime}$ represents the initial value of C_r^1 at $x=0$. Thus

$$\mathrm{D}(P_n)\bar{C}_r^1=\mathrm{D}(uC^{1\prime}+v\bar{C}^0)_r, \qquad \ldots(37)$$

where $\mathrm{D}(uC^{1\prime}+v\bar{C}^0)_r$ is similar to $\mathrm{D}(uC')_r$ in the two-dimensional problem, except that the initial conditions column is replaced by

$$\begin{array}{l}-u_nC_n^{1\prime}-v_n\bar{C}_n^0\\ -u_{n-1}C_{n-1}^{1\prime}-v_{n-1}\bar{C}_{n-1}^0\\ \text{----------}\\ \text{----------}\\ -u_1C_1^{1\prime}-v_1\bar{C}_1^0.\end{array}$$

It is more convenient to split this determinant into two determinants by separating the $uC^{1\prime}$ and $v\bar{C}$ terms. Then, recalling equation (14), we can write the solutions for $\bar{C}^1$ in the form

$$\mathrm{D}(P_n)\bar{C}_r^1=\mathrm{D}(uC^{1\prime})_r+\frac{\mathrm{D}(v\mathrm{D}(uC^{0\prime}))_r}{\mathrm{D}(P_n)}. \qquad \ldots(38)$$

The notation of the numerator in the last term means that $\mathrm{D}(v\mathrm{D}(uC^{0\prime}))_r$ is of the usual form but with $-v\mathrm{D}(uC^{0\prime})_r$ as the terms in its initial conditions column.

Dividing equation (38) by $\mathrm{D}(P_n)$ and noting that all the roots of $[\mathrm{D}(P_n)]^2$ are repeated, we get the solution

$$\begin{aligned}C_r^1=&\sum_{m=1}^{n}\left\{\frac{(p-\alpha_m)\mathrm{D}(uC^{1\prime})_r}{\mathrm{D}(P_n)}\right\}_{p=\alpha_m}\exp(\alpha_mx)+\\&+\sum_{m=1}^{n}\left\{\frac{(p-\alpha_m)^2\mathrm{D}[v\mathrm{D}(uC^{0\prime})]_r}{[\mathrm{D}(P_n)]^2}\right\}_{p=\alpha_m}x\exp(\alpha_mx)+\\&+\sum_{m=1}^{n}\left\{\frac{\mathrm{d}}{\mathrm{d}p}\left[\frac{(p-\alpha_m)^2\mathrm{D}(v\mathrm{D}(uC^{0\prime}))_r}{[\mathrm{D}(P_n)]^2}\right]\right\}_{p=\alpha_m}\exp(\alpha_mx). \qquad \ldots(39)\end{aligned}$$

To find the standard deviations, equation (33) is multiplied by y^2 and integrated from $y=+\infty$ to $-\infty$, giving

$$u\frac{\partial C^2}{\partial x}-2vC^1=\frac{\partial}{\partial z_j}\left(K_z\frac{\partial C^2}{\partial z}\right)+2K_yC^0. \qquad \ldots(40)$$

Application of the Laplace transform with finite differences in the vertical, and initial values $C^{2\prime}$, now leads to the equation

$$\bar{C}_r^2=\frac{\mathrm{D}(uC^{2\prime})_r}{\mathrm{D}(P_n)}+2\frac{\mathrm{D}(v\mathrm{D}(uC^{1\prime}))_r}{[\mathrm{D}(P_n)]^2}+2\frac{\mathrm{D}(K_y\mathrm{D}(uC^{0\prime}))_r}{[\mathrm{D}(P_n)]^2}+2\frac{\mathrm{D}[v\mathrm{D}(v\mathrm{D}(uC^{0\prime}))]_r}{[\mathrm{D}(P_n)]^3}. \qquad \ldots(41)$$

Inverting equation (41) with the aid of the repeated root theorem, equation (11), we get

$$
\begin{aligned}
C_r^2 = {} & \sum_{m=1}^{n} \left\{ \frac{(p-\alpha_m)\mathrm{D}(uC^{2\prime})_r}{\mathrm{D}(P_n)} \right\}_{p=\alpha_m} \exp(\alpha_m x) + \\
& + 2 \sum_{m=1}^{n} \left\{ \frac{(p-\alpha_m)^2 \mathrm{D}(v\mathrm{D}(uC^{1\prime}))_r}{[\mathrm{D}(P_n)]^2} \right\}_{p=\alpha_m} x \exp(\alpha_m x) + \\
& + 2 \sum_{m=1}^{n} \left\{ \frac{\mathrm{d}}{\mathrm{d}p} \left[\frac{(p-\alpha_m)^2 \mathrm{D}(v\mathrm{D}(uC^{1\prime}))_r}{[\mathrm{D}(P_n)]^2} \right] \right\}_{p=\alpha_m} \exp(\alpha_m x) + \\
& + 2 \sum_{m=1}^{n} \left\{ \frac{(p-\alpha_m)^2 \mathrm{D}(K_y \mathrm{D}(uC^{0\prime}))_r}{[\mathrm{D}(P_n)]^2} \right\}_{p=\alpha_m} x \exp(\alpha_m x) + \\
& + 2 \sum_{m=1}^{n} \left\{ \frac{\mathrm{d}}{\mathrm{d}p} \left[\frac{(p-\alpha_m)^2 \mathrm{D}(K_y \mathrm{D}(uC^{0\prime}))_r}{[\mathrm{D}(P_n)]^2} \right] \right\}_{p=\alpha_m} \exp(\alpha_m x) + \\
& + \sum_{m=1}^{n} \left\{ \frac{(p-\alpha_m)^3 \mathrm{D}(v\mathrm{D}(v\mathrm{D}(uC^{0\prime})))_r}{[\mathrm{D}(P_n)]^3} \right\}_{p=\alpha_m} x^2 \exp(\alpha_m x) + \\
& + 2 \sum_{m=1}^{n} \left\{ \frac{\mathrm{d}}{\mathrm{d}p} \left[\frac{(p-\alpha_m)^3 \mathrm{D}(v\mathrm{D}(v\mathrm{D}(uC^{0\prime})))_r}{[\mathrm{D}(P_n)]^3} \right] \right\}_{p=\alpha_m} x \exp(\alpha_m x) + \\
& + 2 \sum_{m=1}^{n} \left\{ \frac{\mathrm{d}^2}{\mathrm{d}p^2} \left[\frac{(p-\alpha_m)^3 \mathrm{D}(v\mathrm{D}(v\mathrm{D}(uC^{0\prime})))_r}{[\mathrm{D}(P_n)]^3} \right] \right\}_{p=\alpha_m} \exp(\alpha_m x). \qquad \ldots (42)
\end{aligned}
$$

Obviously this form of solution, with its determinants within determinants and their derivatives, is too complicated for general use without the aid of high-speed computing aids. Nevertheless the terms represent the discrete effects of the wind shear components and diffusion coefficients, and the interactions between them, and the possibilities of simplifying the computing problem may be examined by studying the nature of the solution.

4.2.2. *The nature of the three-dimensional solutions*

The solutions formulated in equations (39) and (42) reduce to simpler forms as x becomes large enough for them to be dominated by the terms in which $p = 0$, and these terms are dominated in turn by those which include the highest powers of x.

The first sum on the right-hand side of equation (39) represents the effect of the initial vertical shear in the plume. More specifically, if the initial conditions comprise not just a single point source but sources in several layers centred at various cross-wind distances from the x axis, and if the cross-wind components v are all zero, then the cross-wind displacements of the centroids are given by

$$
Y_r = \frac{C_r^1}{C_r^0} = \frac{1}{C_r^0} \sum_{m=1}^{n} \left\{ \frac{(p-\alpha_m)\mathrm{D}(uC^{1\prime})_r}{\mathrm{D}(P_n)} \right\}_{p=\alpha_m} \exp(\alpha_m x). \qquad \ldots (43)
$$

With an argument similar to that used to derive equation (15) and a reminder that the initial displacements

$$
Y_s^1 = \frac{C_s^{1\prime}}{C_s^{0\prime}},
$$

it can be shown that at large distances, when $p = 0$

$$Y_r \to \frac{\sum_{s=1}^{n} (u_s C_s^{0'} Y_s^1)}{\sum_{s=1}^{n} (u_s C_s^{0'})} \qquad \ldots (44)$$

for all values of r. In other words, the plume eventually has no shear with height and the y co-ordinate of its axis is a weighted mean of the initial displacements, the weight being provided by the initial fluxes in each layer.

If we now take cross-wind speeds, v, into account, it is apparent that the eventual positions of the centroids in each layer are determined mainly by the second sum on the right-hand side of equation (39). Following the same argument as that leading to equations (15), (18) and (19) we have, for large values of x,

$$\left[\frac{p\mathrm{D}(v\mathrm{D}(uC^{0'}))_r}{\mathrm{D}(P_n)}\right]_{p=0} = \frac{\sum_{s=1}^{n} v_s \mathrm{D}(uC^{0'})_s}{\sum_{s=1}^{n} u_s}, \qquad \ldots (45)$$

hence

$$C_r^1 \to \left\{\frac{\sum_{s=1}^{n} v_s[p\mathrm{D}(uC^{0'})_s/\mathrm{D}(P_n)]}{\sum_{s=1}^{n} u_s}\right\}_{p=0} x = \frac{\sum_{s=1}^{n} v_s \sum_{s=1}^{n} u_s C_s^{0'}}{\left(\sum_{s=1}^{n} u_s\right)^2} x \qquad \ldots (46)$$

Therefore,

$$Y_r \to \frac{\sum_{s=1}^{n} v_s}{\sum_{s=1}^{n} u_s} x = \frac{\text{mean value of } v}{\text{mean value of } u} x \qquad \ldots (47)$$

for all values of r. Thus, at all levels, the material eventually travels along the vector mean wind direction in the diffusion régime, regardless of the diffusion coefficients or the initial conditions.

The last sum on the right-hand side of equation (39) denotes the eventual shear imposed on the plume by the cross-wind shear, and at large distances this contribution becomes the dominant factor in the shearing effect. The sum can be manipulated into a slightly simpler form for $p = 0$ by taking the x axis along the mean wind direction, i.e.

$$\sum_{s=1}^{n} v_s = 0.$$

But an easier approach is to note that the ultimate shearing effect can be obtained by taking $C^{1'} = 0$ and $C^{0'} =$ a constant at all levels in equation (36). Then the solution for

$\bar{C}_r^1$ becomes

$$D(P_n)\bar{C}_r^1 = D(vC^{0\prime}/p)_r = \frac{C^{0\prime}}{p} D(v)_r \qquad \ldots(48)$$

and because p is a factor of $D(v)_r$ when $\sum_{s=1}^{n} v_s = 0$,

we get

$$C_r^1 = C^{0\prime}\left\{\frac{p[D(v)_r/p]}{D(P_n)}\right\}_{p=0} + \text{exponential terms which} \to 0 \text{ as } x \to \infty. \qquad \ldots(49)$$

Now,

$$\left\{\frac{D(P_n)}{p}\right\}_{p=0} = (-1)^n \prod_{s=1}^{n-1}(k_s) \sum_{s=1}^{n} u_s$$

where

$$\prod_{s=1}^{n-1}(k_s) = k_1k_2k_3 \ldots . k_{n-1}. \qquad \ldots(50)$$

Therefore for the particular initial conditions specified,

$$Y_r \to \frac{[D(v)_r/p]_{p=0}}{(-1)^n \prod_{s=1}^{n-1}(k_s) \sum_{s=1}^{n} u_s}. \qquad \ldots(51)$$

This expression can be used to calculate the eventual values of Y_r, but in order to obtain an approximate indication of the magnitude of the wind shear effect let us deal with the special case of k = a constant in all layers, with u and v varying linearly with height. Let

$$u_r = \mathrm{u} + \Delta u\left[\frac{2r-n-1}{2(n-1)}\right] \quad \text{and} \quad v_r = \Delta v\left[\frac{2r-n-1}{2(n-1)}\right],$$

where u is the mean wind and Δu and Δv are the total shears in the diffusion régime. Then

$$(-1)^n \prod_{s=1}^{n-1}(k_s) \sum_{s=1}^{n} u_s = (-1)^n k^{n-1} n\mathrm{u}$$

and it can be shown that

$$\left[\frac{D(v)_n}{p}\right]_{p=0} = \frac{(-1)^n k^{n-2}\Delta v\left(\mathrm{u} - \frac{\Delta u}{5}\right)}{24} n^3 + \text{terms containing lower powers of } n. \qquad \ldots(52)$$

If we increase the number of layers, n, indefinitely, and recall that $k = K_z(n/H)^2$ (where H represents the depth of the diffusion régime), we see that for large values of x

$$Y_n \to \frac{\Delta v}{24}\frac{H^2}{K_z}\left(1 - \frac{\Delta u}{5\mathrm{u}}\right). \qquad \ldots(53)$$

A similar argument applied to the bottom layer yields

$$Y_1 \to -\frac{\Delta v}{24}\frac{H^2}{K_z}\left(1+\frac{\Delta u}{5\mathrm{u}}\right). \qquad \ldots(54)$$

The eventual cross-wind displacements of the centroids in each layer, therefore, depend directly on the cross-wind shear and on the square of the depth of the diffusion régime and inversely on the coefficient of vertical eddy diffusion. The wind component and shear along the plume axis are also involved but their combined contribution is small. The most important conclusion is that the shearing process is limited; it does not continue indefinitely. Figure 3 illustrates the transport and diffusion system which leads to the eventual balance between cross-wind movement and vertical diffusion.

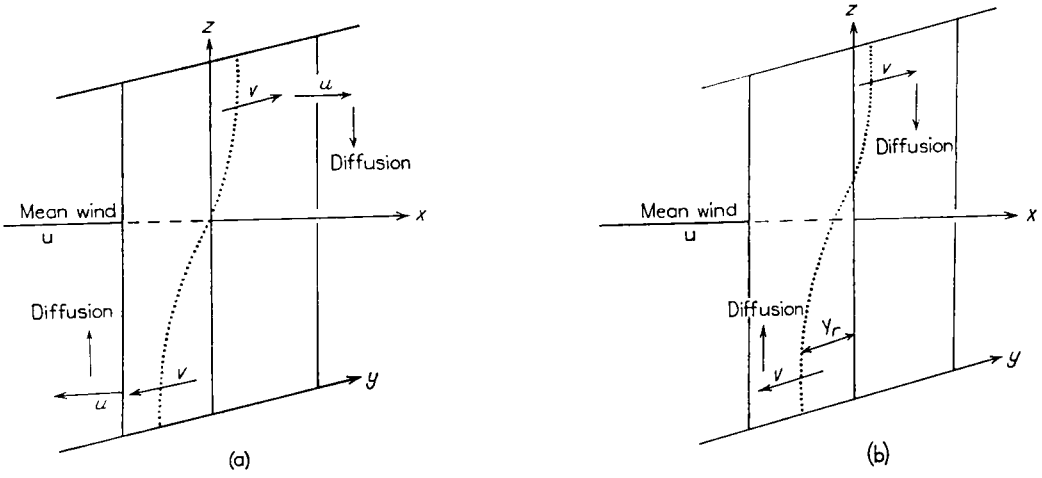

FIGURE 3 (*a*) and (*b*). Two stages in an example of vertical diffusion and transport due to shear in a plume.

u = mean wind component (along-wind)
u = along-wind component in direction x
v = cross-wind component in direction y
Y_r = cross-wind displacement of the centroid in layer r.
..... Positions of the centroids in each layer.

Figure 3 represents the vertical distributions of the centroids of layers in a plume. The first section, 3(*a*), is for a short time-interval after the artificial but instructive initial condition in which the total amount of material is assumed to be uniformly distributed with height, i.e. $C^{0\prime}$ is the same in each layer. The wind shear now distorts the shape of the plume without having any net effect on the total amount of material in each layer. With the wind shear depicted in the figure, material in the top half of the plume is transported in both cross-wind and along-wind directions (in the senses illustrated) relative to the centre of the plume. This produces a gradient of concentration such that net vertical diffusion takes place in a downward direction. In the lower half of the plume, transport and vertical diffusion take place in directions opposite to those in the top half, but because the plume is spreading laterally (in the $\pm y$ directions) at all levels as x increases, the downward diffusion just mentioned is greater than the upward diffusion. Therefore, the material at the top of the plume does not progress as far across the plume as that which is transported outwards at the bottom of the diffusion régime.

At a later stage, Figure 3(*b*), when the along-wind gradients of concentration have become small compared with the cross-wind and vertical gradients, the cross-wind distortion of the plume is controlled entirely by the cross-wind shear and vertical diffusion. When the plume is sufficiently distorted, these two effects are in balance and no further distortion takes place. The ultimate cross-wind spread of the centroids (distances along the y axis between the top and bottom centroids) is independent of the along-wind speed or shear and, in the particular example being discussed, it is given by

$$Y_n - Y_1 = \frac{\Delta v}{12}\frac{H^2}{K_z} \qquad \ldots(55)$$

$$= \frac{\text{magnitude of linear shear} \times (\text{depth of diffusion régime})^2}{12 \times \text{vertical diffusion coefficient (assumed constant)}}.$$

The effect of the along-wind shear is to displace the plume a distance

$$\left(\frac{\Delta u}{5u}\right)\left(\frac{\Delta v}{12}\frac{H^2}{K_z}\right)$$

in the same direction as the lower cross-winds.

Again, we should bear in mind that this contribution to the cross-wind displacement of the plume relates to the peculiar initial conditions. However, the example serves as a reminder that the along-wind shear does play a part in determining the eventual cross-wind displacement of the plume.

When the initial conditions comprise an uneven distribution of C^0 with height the calculation of the ultimate y co-ordinate of the centroid of the plume as a whole is much more difficult. With a constant K_z and linear variation of v with height, the eventual distortion is still given by equation (55) but there appears to be no easy method of calculating the eventual displacement of the plume as a whole. Obviously, material from a single point source at ground level starts to move with the low-level winds and so the eventual position of the plume is influenced by these low-level wind directions.

In the special case of both u and K_z constant with height and the linear variation of v already used, there is an interesting relationship between the height of a single source and the behaviour of the centroid at another particular level.

Let us consider the behaviour of the centroid of material in the layer $(n+1-s)$ due to a single source in the layer s, i.e. the two layers are equidistant from, but on opposite sides of the middle of the diffusion régime. The determinant $\mathrm{D}(v\mathrm{D}(uC^{0\prime}))_{n+1-s}$ can be expanded into the sum of a number of pairs of terms of the type

$$[\mathrm{D}(uC^{0\prime})_{n+r-1} \text{ times its cofactor}]v_{n+r-1}$$

and

$$[\mathrm{D}(uC^{0\prime})_r \text{ times its cofactor}]v_r.$$

Now, with the specified conditions, the cofactor of $u_sC_s{}^{0\prime}$ in $\mathrm{D}(uC^{0\prime})_{n+r-1}$ is equal to the cofactor of $v_r\mathrm{D}(uC^{0\prime})_r$ in $\mathrm{D}(v\mathrm{D}(uC^{0\prime}))_{n+1-s}$; the only difference is that the rows of one correspond to the columns of another. Similarly, the cofactor of $u_sC_s{}^{0\prime}$ in $\mathrm{D}(uC^{0\prime})_r$ is equal to the cofactor of $v_{n+r-1}\mathrm{D}(uC^{0\prime})_{n+r-1}$ in $\mathrm{D}(v\mathrm{D}(uC^{0\prime}))_{n+1-s}$. Therefore, since $v_{n+r-1} = v_r$, the sum of the terms is zero. Thus, if the initial displacement of the single source in the layer s is zero, then the centroid in the layer $(n+1-s)$ is directly above the y axis throughout the entire length of the plume.

As a particular example, if the source is at ground level then the y co-ordinate of the centroid of material at the top of the diffusion régime is always zero, and it can be shown that all the other centroids lie on the same side of the y axis as the low-level cross-wind directions. Figure 4 shows some examples of displacement and shear for the stated conditions.

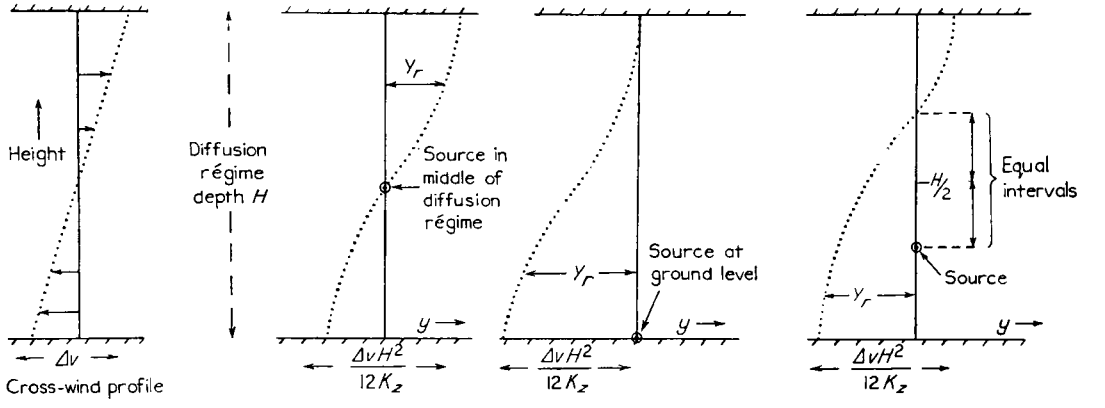

FIGURE 4. Three examples of the eventual cross-wind displacements of centroids with along-wind speed and vertical diffusion coefficient constant with height.

Y_r = cross-wind displacement of the centroid in layer r
K_z = vertical diffusion coefficient
Δv = total cross-wind shear

The solutions for the second moments (equation (42)) can also be considered as sets of terms describing the separate and combined effects of wind shear, diffusion and initial conditions. In equation (42) the first term on the left-hand side denotes the effect of the initial spread of the source, the second and third sums denote the effect of the initial cross-wind distortion of the source. The fourth and fifth sums arise from cross-wind diffusion, and the last three sums account for the effect of cross-wind shear on the along-wind fluxes.

Some of these effects can be described by simpler terms for large values of x. In particular, it can be shown that if all the cross-wind speeds are zero then the standard deviation, σ_y, of material in the y direction is given by

$$\sigma_y \to \left[\frac{2\sum_{r=1}^{n}(K_y)_r}{\sum_{r=1}^{n}u_r}x\right]^{\frac{1}{2}} = \left[\frac{2\times \text{mean value of } K_y}{\text{mean value of } u}x\right]^{\frac{1}{2}} \qquad \ldots(56)$$

at all levels, for large values of x. In other words, the mean value of K_y becomes the eventual cross-wind diffusion coefficient of the plume as a whole.

The effect of cross-wind shear on the standard deviation is best considered by noting that the terms $2vC^1$ and $2K_yC^0$ have identical roles in equation (40). Therefore, the effect of cross-wind shear is similar to that of simple cross-wind diffusion with a diffusion coefficient of v_rY_r. Using equations (53) and (54) we have that the eventual virtual cross-wind

coefficients in the top and bottom layers of a diffusion régime, in which the wind varies linearly with height (as in the example already used), are given by

$$K_{v_n} \to \frac{(\Delta v)^2}{24}\frac{H^2}{K_z}\left(1-\frac{\Delta u}{5\mathrm{u}}\right) \quad \text{and} \quad K_{v_1} \to \frac{(\Delta v)^2}{24}\frac{H^2}{K_z}\left(1+\frac{\Delta u}{5\mathrm{u}}\right), \qquad \ldots(57)$$

where K_v denotes the virtual wind shear diffusion coefficient.

At great distances, however, the spread of the plume becomes controlled by the mean value of K_v throughout the diffusion régime, and the mean value for the example under consideration can be calculated to be

$$K_v(\text{plume}) = \frac{(\Delta v)^2}{120}\frac{H^2}{K_z}. \qquad \ldots(58)$$

An obvious question arising from these results is: what is meant by 'large values of x'? There is no precise answer, but it can be shown that these asymptotic results are very nearly attained at distances of travel greater than about $\mathrm{u}H^2/2K_z$ where K_z and u are mean values for the diffusion régime.

To illustrate the magnitude of the wind shear effects, a few examples are given in Table I.

It can be concluded that the shearing of the plume as a whole (i.e. the limiting value of $Y_n - Y_1$) is often small compared with the distance from the source. Therefore, in many practical cases the computations may be simplified by assuming that the plume travels along the mean wind direction in the diffusion régime, with negligible shearing action on the centroids at each level. We should note, however, that initial buoyancy in a plume could upset this conclusion when the vertical diffusion, K_z, is small. Normally, for a non-buoyant plume, a small K_z indicates that although the eventual distortion due to wind shear may be large, the slow vertical diffusion means that the material is not spread through a sufficient depth for the distortion to become effective until after some considerable time of travel. But, if the plume is sufficiently buoyant, the buoyancy carries the plume up through some depth and the shearing action becomes effective much earlier in the dispersion processes.

The cross-wind shear should not be neglected in computing the total cross-wind dispersion, and caution must be used in attempting to guess the intermediate effects of shear between the source and distances at which the asymptotic values apply. The virtual diffusion coefficient, K_v, increases from zero at the source to its maximum of the asymptotic value, but the rate of increase is difficult to compute and there is scope for seeking an empirical method of determining it.

A compromise between accuracy and the reduction of computing labour is to compute only the zero-order moments of the concentration by the Laplace transform method and then to compute the standard deviation, in the y direction, from the formula

$$\sigma_y^2 = 2[K_y + K_v]x. \qquad \ldots(59)$$

In this formula, K_y is the mean value of the cross-wind diffusion coefficients and K_v has a value between zero, for $x = 0$, and the mean value of the eventual virtual cross-wind diffusion coefficient at the distance beyond which the asymptotic values apply. In this approximation it is assumed that standard deviation, σ_y, is constant with height.

TABLE I. *Examples of wind shear effects*

Airstream conditions	u, constant with height (metres per second)	4	2	10	4	8	4	10
	Δv, magnitude of cross-wind shear (metres per second)	2	1	4	2	2	2	4
	K_z, constant with height (square metres per second)	1	10^{-1}	10^{2}	10^{-1}	10	1	10
	H, depth of diffusion régime (metres)	100	50	2000	100	1000	500	2000
Appropriate asymptotic values	Distortion, $(Y_n - Y_1) = \frac{\Delta v}{12}\frac{H^2}{K_z}$ (kilometres)	1·7	0·02	13·4	17	17	42	134
	Mean virtual cross-wind diffusion coefficient $K_v = \frac{(\Delta v)^2}{120}\frac{H^2}{K}$ (square metres per second)	$3{\cdot}3 \times 10^{2}$	2×10^{2}	$5{\cdot}3 \times 10^{3}$	$3{\cdot}3 \times 10^{3}$	$3{\cdot}3 \times 10^{3}$	$8{\cdot}3 \times 10^{3}$	$5{\cdot}3 \times 10^{4}$
Asymptotic values almost attained at . . .	Distance (kilometres)	20	25	200	200	400	500	2000
	Time (hours)	$1\frac{1}{2}$	$3\frac{1}{2}$	$5\frac{1}{2}$	14	14	35	56

4.2.3. *Application to the instantaneous line source*

The equation for diffusion from an instantaneous line source of infinite cross-wind length parallel to the y axis may be written

$$\frac{\partial C}{\partial t}+u\frac{\partial C}{\partial x}=\frac{\partial}{\partial z}\left(K_z\frac{\partial C}{\partial z}\right)+K_x\frac{\partial^2 C}{\partial x^2} \qquad \ldots(60)$$

where t = time and K_x is the diffusion coefficient in the x direction.

As equation (60) is of a similar form to equation (33) it can be dealt with in the same way as that for the continuous point source, the moments being taken along the x axis. However, at a point the variation of concentration with time may well have a significantly skew distribution; the concentration–time pattern will be similar to that obtained by taking a vertical section of a continuous plume oblique to the mean wind direction. Therefore, in order to evaluate the concentration–time distributions from equation (60) it may be necessary to solve the equations for moments higher than the second. Such a procedure is too laborious and it is much easier to let the origin of co-ordinates move with the cloud, in other words to write the equation as

$$\left(\frac{\partial}{\partial t}+\frac{\mathrm{u}\partial}{\partial x}\right)C+(u-\mathrm{u})\frac{\partial C}{\partial x}=\frac{\partial}{\partial z}\left(K_z\frac{\partial C}{\partial z}\right)+K_x\frac{\partial^2 C}{\partial x^2} \qquad \ldots(61)$$

or

$$\frac{\partial C}{\partial t}+u'\frac{\partial C}{\partial x}=\frac{\partial}{\partial z}\left(K_z\frac{\partial C}{\partial z}\right)+K_x\frac{\partial^2 C}{\partial x^2} \qquad \ldots(62)$$

where u' denotes departures from the mean wind speed, u, and $\partial/\partial t$ denotes changes at a point moving with the speed u.

Equation (62) is of the same form as equation (60), but with u' in place of u the solutions are less likely to be skew-symmetric and are easier to obtain.

Long-range features of the solutions are similar to those deduced for the continuous plume; for example, the belt of material as a whole eventually progresses with the mean along-wind speed, u, taken throughout the diffusion régime. The effect of wind shear in the x direction, on distortion and dispersion, is similar to that of cross-wind shear on a plume, with the exception that, whereas the along-wind shear plays a small part in the distortion and diffusion of a plume, the cross-wind shear has no effect on the infinite cross-wind line source.

4.2.4. *Calculation of dosages*

4.2.4.1. *Dosages from an instantaneous line source.* After the zero, first and second moments of the concentration distributions due to an instantaneous line source have been determined, the dosages ($\int_{-\infty}^{\infty} C\,\mathrm{d}t$) at any particular point can be calculated by assuming the distributions to be Gaussian in the along-wind direction and by summing the concentrations derived from the moments.

However, the dosages can be calculated directly from the diffusion equations. Integrating equation (60) with respect to time, and noting that $C = 0$ for $t = \pm\infty$ when $x > 0$, we get

$$u\frac{\partial D}{\partial x} = \frac{\partial}{\partial z}\left(K_z\frac{\partial D}{\partial z}\right) + K_x\frac{\partial^2 D}{\partial x^2} \qquad \ldots(63)$$

where the dosage $D = \int_{-\infty}^{\infty} C\,\mathrm{d}t$.

Before dealing with this equation in full, we may note that it differs in form from equation (34) only in the addition of the $K_x(\partial^2 D/\partial x^2)$ term. Therefore, if the effect of the along-wind diffusion is small, compared to the effect of the wind shear, the dosages at a point are the same as the integrated along-wind concentration, C, at the time when the centroid of the whole belt of material (throughout the diffusion régime) is over the point.

The Laplace transform of equation (63) yields

$$p(u-pK_x)D + K_x\left(\frac{\partial D}{\partial x}\right)' - (u-pK_x)D' = \frac{\partial}{\partial z}\left(K_z\frac{\partial \bar{D}}{\partial z}\right), \qquad \ldots(64)$$

where D' and $(\partial D/\partial x)'$ are initial values at $x = 0$. This equation can be solved by the same method as that used to deal with the zero-moment equations. It has additional complications in that the polynomial whose roots are required now has $p(u-pK_x)$ instead of p, and it may not be possible to specify the initial conditions exactly.

The substitution of $p(u-pK_x)$ for p means that $2n$ roots must be determined for the airstream polynomial. One of these roots is obviously $p = 0$, so the solutions at a large distance from the source can be easily obtained. Following the same lines as those used to arrive at equation (19), it can be shown that the eventual dosage D in every layer is given by

$$D\sum_{s=1}^{n} u_s = \sum_{s=1}^{n}(uD')_s - \sum_{s=1}^{n}\left(K_x\frac{\partial D}{\partial x}\right)'_s. \qquad \ldots(65)$$

Now the total quantity, Q, of material which passes through a cross-section of unit area in the y, z plane is given by

$$Q = \int_{-\infty}^{\infty} uC\,\mathrm{d}t = uD. \qquad \ldots(66)$$

Therefore, the term $\sum_{s=1}^{n}(uD')_s$ denotes the total amount of material per unit cross-sectional area emitted at the source, and the left-hand side of equation (65) denotes the corresponding amount which passes over a point at a large distance from the source. Unless material is being created or destroyed *en route*, these initial and final quantities must be equal, and it follows that

$$\sum_{s=1}^{n}\left(K_x\frac{\partial D}{\partial x}\right)'_s = 0. \qquad \ldots(67)$$

This deduction agrees with the intuitive reasoning that the eventual dosage at any level should depend only on the total amount of material emitted and the depth through which this material is spread.

The deduction also imposes a restriction on the choice of initial values of $\partial D/\partial x$; the sum of the products of these derivatives and the along-wind diffusion coefficients, K_x, must be zero. The choice of the initial value of $\partial D/\partial x$ at any particular level is another

problem which is especially awkward because it concerns dispersion very close to the source, where the diffusion equations in use are not valid. However, in the methods being used, it is not worth-while attempting to specify the initial derivatives with undue precision because such precision would be lost in the inaccuracies of the finite-difference approximation close to the source. Therefore, it is sufficient for most purposes to make the initial values of $\partial D/\partial x$ plausible but convenient. For example, if the source is confined to one layer, then it is plausible to assume that $(\partial D/\partial x)'$ in that layer is negative, while in the immediately adjacent layers it is positive, and in the layers further from the source it is zero. Whatever the initial values are, the mathematical analogue of the diffusion process changes these derivatives so as to be compatible with the airstream conditions and concentration profile by the time the material has spread through a few layers. Even if all the initial derivatives are set to zero, the solutions at all but short ranges are likely to be tolerably accurate.

The initial dosages (D') themselves are best determined by equation (66), that is to say by the quantity of material released in the layer divided by the wind speed.

4.2.4.2. *Dosages from a short plume.* A more general form of the dosage equation is

$$u\frac{\partial D}{\partial x}+v\frac{\partial D}{\partial y}=\frac{\partial}{\partial z}\left(K_z\frac{\partial D}{\partial z}\right)+K_x\frac{\partial^2 D}{\partial x^2}+K_y\frac{\partial^2 D}{\partial y^2}. \qquad \ldots(68)$$

If the dosage is due to the emission of material for a finite time from a point source, the dosages can be computed by taking the y axis along the mean wind direction in the diffusion régime, and solving moments of this equation. The initial values of D^0 are given by equation (66), and plausible guesses at $(\partial D^0/\partial x)'$, with the restriction of equation (67), suffice for accuracy of the solutions at medium and long ranges.

The initial values of the y co-ordinates of the centroids of the dosage patterns are normally known; in most cases they are all zero. Values of $(\partial D/\partial x)'$ are obtained as follows: initially the centroid of the dosage pattern in any layer moves in the same direction as the centroid of material, which in turn moves with the wind in the layer, i.e.

$$\left(\frac{\partial D^1}{\partial x}\right)'=\left(\frac{\partial Y_d D^0}{\partial x}\right)'=\left(D^0\frac{\partial Y_d}{\partial x}+Y_d\frac{\partial D^0}{\partial x}\right)'$$

$$=\frac{\mathrm{v}}{\mathrm{u}}(D^0)'+\left(Y_d\frac{\partial D^0}{\partial x}\right)', \qquad \ldots(69)$$

where Y_d' is the initial y co-ordinate of the centroid and u and v are the x and y components of the wind in the source layer. On most occasions the second term on the right will be zero.

For adequate specification of the dosage patterns the solution of the second-moment equation is required and this means that the initial values $(D^2)'$ and $(\partial D^2/\partial x)'$ must be specified. Again, plausible estimates, or even zero values, are adequate for tolerable accuracy at all but short ranges.

Theoretically, it is possible to compute dosages from a line source of finite length and finite direction by specifying higher moments of the initial distribution and solving higher-moment equations, but the computing labour is prohibitive (even with a high-speed computer) and it is easier to superpose solutions for simple sources.

5. SOLUTIONS BY ANALOGUE COMPUTING

The basic finite-difference equation (1) is in a form particularly suitable for analogue computing. Tyldesley[2] has given a full description of the analogue computing technique. In this paper it is sufficient to say that the method entails translating the equation into an electrical circuit, linking amplifiers and integrators in exactly the same way as the products and integrals are linked in the integral, with respect to x, of the diffusion equations for all layers. Once the circuitry is completed, potentiometers are set to the values of the airstream constants and initial source-conditions, and variations of concentration with x can be obtained as consequential variations, with time, of voltages at particular points in the circuitry. Graphs of these voltage–time variations can be plotted automatically. The scaling factors are usually arranged so that the computing time, corresponding to the distance over which the solutions are required, is less than one minute. A sudden change in airstream conditions may be simulated by holding up the computation at a prescribed time while the potentiometer settings are changed.

The analogue computing method is fairly easy and has the interesting advantage that, if the output facilities are fast enough, the operator may be able to see almost at a glance the effect of selected airstream parameters on the diffusion pattern. He can vary these parameters by turning potentiometer knobs and so conduct analogue experiments.

There are difficulties, however, in that the electrical problem of converting moments to concentrations, displacements and standard deviations is much more complex than that of solving the moment equations. Furthermore, solutions for several moments may require more electrical units than are available in the computer. Integrating both sides of equation (1) with respect to x, it becomes apparent that to set up the analogue we need one integrator (to integrate the right-hand side) and two amplifiers (to multiply values of C by the constants u and K) for each layer. A 10-layer model needs a chain of 10 integrators and 20 amplifiers.

Similar chains are required for the first- and second-moment equations, together with links between the chains to simulate the $-vC^0$ term in equation (35) and the $-2vC^1$ and $2K_yC^0$ terms in equation (40). The introduction of these three terms necessitates three additional amplifiers for each layer. Thus the solution of zero, first and second moments for a 10-layer model requires a network of at least 30 integrators and 120 amplifiers. Very few electrical analogue computers have as many integrators or amplifiers as this; so, although the analogue method is simple and affords experimental facilities, it is not suitable for dealing with several moments in a model with a large number of layers.

6. SOLUTIONS BY NUMERICAL PREDICTION

6.1. Stability and accuracy

The diffusion equations already used are of the parabolic type, which can be solved by replacing the time or distance derivatives by finite differences and using them to predict changes over short intervals. For example, equation (1) can be approximated to

$$u_r\frac{(C_{r,s+1}-C_{r,s})}{\delta x}=[K_rC_{r+1,s}-(K_r+K_{r-1})C_{r,s}+K_{r-1}C_{r-1,s}]\left(\frac{1}{h^2}\right), \qquad \ldots(70)$$

where the suffixes s and $s+1$ denote successive positions at intervals of δx along the x axis.

This equation, together with the assumed boundary conditions, can be used to calculate the concentrations in a step-by-step process from the initial values in the x direction. The errors arising from the finite-difference approximations, however, grow and lead to computational instability if the interval δx is too large. To get an idea of the restriction which should be made on δx we can note that if K and u are constant with height then the necessary condition to prevent computational instability is

$$\frac{K\delta x}{uh^2} \leqslant \frac{1}{2}. \qquad \ldots(71)$$

To obtain an appreciable reduction of errors, however, it is advisable to make

$$\frac{K\delta x}{uh^2} = \frac{1}{6} \qquad \ldots(72)$$

approximately. This means that the interval δx must usually be very short compared with the distance over which solutions are required. For example, if we are interested in diffusion over a few kilometres the likely choice of h would be about 10 metres if K were 10 square metres per second and u were 5 metres per second, then δx should be about 8 metres, and so for every kilometre in range the concentrations at all levels would have to be computed for 125 successive steps in the x direction.

When u and K vary with height the value of δx for ensuring that errors are small is still given by equation (72), with the minimum value of $(u_{r+1}+u_r)/2K_r$.

Equation (70) uses a forward difference for the x derivative. An obvious method of attempting to improve the accuracy of the solution is to try the centred difference

$$(C_{r,s+1} - C_{r,s-1})/2\delta x$$

on the left-hand side of the equation. Unfortunately this formula leads to instability, so it cannot be used. However, stability is preserved in a modified formula, namely

$$u_{r,s}\frac{(C_{r,s+1}-C_{r,s-1})}{2\delta x} = [K_rC_{r+1,s}-\tfrac{1}{2}(K_r+K_{r-1})(C_{r,s+1}+C_{r,s-1})+K_{r-1}C_{r-1,s}]\left(\frac{1}{h^2}\right) \qquad \ldots(73)$$

provided that equation (71) is still satisfied.

Another formula, which is slightly more accurate than equation (70), is obtained by using a mean value of the right-hand side of the equation for the two distances s and $s+1$, i.e.

$$u_{r,s}\frac{(C_{r,s+1}-C_{r,s-1})}{2\,\delta x} = \tfrac{1}{2}[K_r(C_{r+1,s+1}+C_{r+1,s})-(K_r+K_{r-1})(C_{r,s+1}+C_{r,s}) + \\ + K_{r-1}(C_{r-1,s+1}+C_{r-1,s})]\left(\frac{1}{h^2}\right). \qquad \ldots(74)$$

But this is an implicit formula, which means that the whole column of new values for $s+1$ must be computed from a set of simultaneous equations—one equation for each layer.

A convenient compromise between accuracy and computing speed is to use either equation (70) or equation (74) for the first interval and then equation (73) for the subsequent steps.

The extension of the prediction technique to the first- and second-moment equations is straightforward; for example, equation (35) can be approximated to

$$u_r \frac{(C^1_{r,s+1} - C^1_{r,s})}{\delta x} - v_r C^0_{r,s} = [K_r C^1_{r+1,s} - (K_r + K_{r-1}) C^1_{r,s} + K_{r-1} C^1_{r-1,s}]\left(\frac{1}{h^2}\right). \quad \ldots (75)$$

Thus the first and second moments can also be calculated by the step-by-step prediction process.

6.2. The computing time

Solutions for long-range problems will often be required over a distance long enough to show the effects of the upper lid (usually an inversion or stable layer) on the diffusion, but short-range calculations are more likely to be required only for a distance too short for the upper lid of the model to affect seriously the low-level diffusion. This means that to show the effect of an inversion or upper lid, a calculation for diffusion from a ground-level source should proceed to at least the distance where, if the upper lid did not exist, the vertical standard deviation, σ, of the distribution of diffusing material would become about H, where H is the height of the diffusion régime. For a short-range answer the calculation should be taken to the distance where σ is approximately $\frac{1}{2}H$. Since $\sigma^2 \simeq 2Kx/u$ (where K and u have characteristic values) solutions are normally required up to a distance, X, given approximately by

$$X = \frac{AH^2u}{2K} = \frac{An^2h^2u}{2K}, \quad \ldots (76)$$

where A varies from about $\frac{1}{4}$ for short-range problems to about 1 for long-range calculations. Therefore, using equation (72), we get the number, N, of steps to be computed as

$$N = 3An^2 \quad \ldots (77)$$

and the total computing time will be approximately proportional to An^2 for each layer, i.e. proportional to An^3 for the whole computation. Thus the computing labour does not depend primarily on the magnitudes of the airstream parameters; it is determined mainly by the range of the problem and the number of layers in the diffusion model. The computing labour required for a long-range problem may be up to four times that necessary for short-range diffusion, and refining the model by halving the depth of the layers and doubling their number would multiply the computing time by eight.

To put some real figures into the computing-time formula, let us assess the time required to solve a long-range problem (say, $A = 1$) with the aid of a desk calculator. Taking a 10-layer model and allowing one minute to determine $C_{r,s+1}$ from equation (73), we get the total computing time to be about 1000 minutes (nearly 17 hours) for the two-dimensional or zero-moment equation. The second- and third-moment equations each require more time than that allocated to the zero-moment equation, because of the additional terms. Furthermore, whereas the zero-moment solutions can be checked at each step by ensuring that the total flux over each point is constant, there is no simple step-by-step check for the higher-order moments and their calculation has to be carried out with more care.

After the zero-, first- and second-moment patterns have been obtained, further calculation is needed to determine whatever concentration and dosage information is required. Consequently the total computing time is long, but not prohibitive if only one or two problems are to be solved.

It would be impracticable to attempt to solve a number of problems in this manner without the use of a high-speed electronic digital computer. The repetitive nature of the operations makes the prediction technique specially suitable to digital computer work. An advantage of the prediction technique using such a computer, over the transform and analogue techniques, is that the eddy diffusion coefficients may be changed at every time-step if necessary. A further facility afforded by the use of a digital computer is that the conversion of moments to concentrations, displacements, standard deviations or any other form of answer, is not normally difficult.

The answers are usually printed as lists of numbers or as mechanically-plotted graphs. This printing usually takes several minutes at least, and remembering that the computing time itself may possibly be large for long-range diffusion in multilayer models, we see that, unlike the analogue computer, the digital computer is not so suitable as an experimental tool; it does not afford a means of varying the airstream parameters and seeing the effects almost at a glance.

Before deciding to use a high-speed digital computer, it should be remembered that in most diffusion problems the range of concentration is likely to be large. The range can be dealt with easily in the 'floating point' type of computer, but in the 'fixed point' type of machine the computing programme has to include additional complications so that the numbers in use remain within the limited range of these machines.

7. A MORE GENERAL FORM OF THE EQUATONS

The diffusion equations used in the previous sections are special forms of a more general equation

$$\frac{\partial C}{\partial t}+\frac{u\partial C}{\partial x}+\frac{v\partial C}{\partial y}=\frac{\partial}{\partial z}\left(K\frac{\partial C}{\partial z}\right)+K_x\frac{\partial^2 C}{\partial x^2}+K_y\frac{\partial^2 C}{\partial y^2}. \qquad \ldots(78)$$

Again the principal features of the distribution of the diffused material in each layer can be indicated by moments of the concentration. Defining C^{ab} by the equation

$$C^{ab}=\int_{-\infty}^{\infty}\int_{-\infty}^{\infty}x^a y^b C\,\mathrm{d}x\,\mathrm{d}y \qquad \ldots(79)$$

we have

(i) C^{00} is the total amount of material per unit depth of layer,

(ii) $\left[\frac{C^{10}}{C^{00}}, \frac{C^{01}}{C^{00}}\right]$ are the horizontal co-ordinates (X, Y) of the centroid of material in the layer,

(iii) $\left.\begin{array}{l}\frac{C^{20}}{C^{00}}-X^2\\ \frac{C^{02}}{C^{00}}-Y^2\end{array}\right\}$ are the variances, σ_x^2 and σ_y^2, of material with respect to the x and y axes,

(iv) $\left[\frac{C^{11}}{C^{00}}-XY\right]$ is a measure of the cross-correlation, σ_{xy}, of the material in the layer,

(v) $\left.\begin{aligned}\left[\frac{C^{30}}{C^{00}} - 3X\sigma_x^2 - X^3\right]\Big/\sigma_x^3 \\ \left[\frac{C^{03}}{C^{00}} - 3Y\sigma_y^2 - Y^3\right]\Big/\sigma_y^3\end{aligned}\right\}$ are measures of the skewness, S_x and S_y, of the distributions of material along the x and y axes,

and

(vi) $\left.\begin{aligned}\left[\frac{C^{40}}{C^{00}} - 4XS_x + 3X^2\sigma_x^2 - 4X^4\right]\Big/\sigma_x^4 \\ \left[\frac{C^{04}}{C^{00}} - 4YS_y + 3Y^2\sigma_y^2 - 4Y^4\right]\Big/\sigma_y^4\end{aligned}\right\}$ are measures of the kurtosis in the distributions.

In many problems it is sufficient, for practical purposes, to assume that the distribution of airborne material along a selected axis in a diffusing cloud is Gaussian and, with such an assumption, only the zero, first and second moments are required to specify the distribution. When dealing with emissions from areas or volumes of finite sizes or for finite duration, however, it is expedient to assume other types of distribution which need higher moments for their specifications.

Multiplying equation (70) by 1, x, x^2, x^3, x^4 and xy, and integrating from $x = -\infty$ to $x = +\infty$ we get

$$\frac{\partial C^{00}}{\partial t} = \frac{\partial}{\partial z}\left(K\frac{\partial C^{00}}{\partial z}\right), \qquad \ldots(80a)$$

$$\frac{\partial C^{10}}{\partial t} - uC^{00} = \frac{\partial}{\partial z}\left(K\frac{\partial C^{10}}{\partial z}\right), \qquad \ldots(80b)$$

$$\frac{\partial C^{20}}{\partial t} - 2uC^{10} = \frac{\partial}{\partial z}\left(K\frac{\partial C^{20}}{\partial z}\right) + 2K_xC^{00}, \qquad \ldots(80c)$$

$$\frac{\partial C^{30}}{\partial t} - 3uC^{20} = \frac{\partial}{\partial z}\left(K\frac{\partial C^{30}}{\partial z}\right) + 6K_xC^{10}, \qquad \ldots(80d)$$

$$\frac{\partial C^{40}}{\partial t} - 4uC^{30} = \frac{\partial}{\partial z}\left(K\frac{\partial C^{40}}{\partial z}\right) + 12K_xC^{20}, \qquad \ldots(80e)$$

$$\frac{\partial C^{11}}{\partial t} - uC^{01} - vC^{10} = \frac{\partial}{\partial z}\left(K\frac{\partial C^{11}}{\partial z}\right). \qquad \ldots(80f)$$

Equations similar to 80(b–e) hold for moments in the y direction.

These equations are all of the same type as those discussed in Section 6 and can be solved by the analogue method or by the step-by-step digital technique.

8. THE COMPUTING PROCEDURE

The recommended steps in the computing procedure are as follows:

(i) Estimate the depth of the atmospheric layer in which the diffusion will take place. The lower boundary is ground level or sea level in most problems. The upper boundary is either a 'lid' imposed by a stable layer, or a height which is estimated to be just high enough to keep spurious upper boundary effects insignificant during the computation. More specifically, if H_t is the height of an atmospheric 'lid' and U and K are characteristic values of the wind speed and vertical diffusion coefficient in the anticipated diffusion régime, then for diffusion to a distance x, from a ground-level source, the upper boundary is set at whichever is the lower of H_t or $2\sqrt{(2Kx/U)}$ approximately.

(ii) The diffusion régime is then divided into n layers each of depth h.

(iii) Values of wind components and diffusion parameters are assigned to, and between, the layers as indicated in Figure 1.

(iv) The initial source conditions are represented approximately by turning the given quantity and distribution at the source into moments in one or more of the layers.

(v) The optimum computing step δx is calculated as the minimum value of

$$(u_{r+1}+u_r)h^2/12K_r.$$

(vi) Equation (70) or (74) is used to calculate new values of C_r^0 for each layer at a distance δx, and similar finite-difference forms of the higher-moment equations are used to calculate C_r^1, C_r^2 etc.

(vii) The step-by-step process is repeated until the required range x is attained.

(viii) The moments of concentration are converted to the required characteristics of the distribution of diffusing material, as indicated in Section 7.

9. ASSUMED FORMS OF DISTRIBUTION

9.1. Symmetrical distributions

The moments of concentration yield significant characteristics of the distribution of material in a diffusing cloud, but the precise distribution cannot be obtained from the moments without an assumption of the general form of the cloud. Usually the form is taken to be Gaussian, in which case only the zero, first and second moments are needed to specify the profile.

This assumption of Gaussian distribution is acceptable and convenient for many practical purposes but it is not fundamental to the atmospheric diffusion problem. Any other form of distribution may be assumed, provided that it is acceptably consistent with observed distributions.

From the computational point of view the Gaussian assumption is useful for calculating concentrations at given distances from the centroid of a distribution, but it is inconvenient for computing the distance from the centroid at which a given concentration occurs. Two simple forms of distribution that are convenient for this purpose are a linear profile

$$C = C_y(a-|y-Y|)/a \qquad \ldots(81)$$

and a parabolic profile

$$C = C_y[a^2-(y-Y)^2]/a^2 \qquad \ldots(82)$$

for concentrations in the range $-a \leqslant y-Y \leqslant a$, with $C = 0$ outside this range and $C = C_Y$ at $y = Y$. The zero, first and second moments of these distributions are

$$C^0 = aC_y, \qquad C^1 = YC_0, \qquad C^2 = a^2C^0/6 \qquad \ldots(83)$$

and

$$C^0 = 4aC_y/3, \qquad C^1 = YC_0, \qquad C^2 = a^2C^0/5. \qquad \ldots(84)$$

Figure 5 shows the comparisons between these profiles and a Gaussian profile. In this figure the three distributions shown have the same zero, first and second moments. The width of a cloud with a Gaussian distribution is often taken to be $4{\cdot}3\sigma$, where σ denotes standard deviation (the concentration at $2{\cdot}15\sigma$ from the centroid is one tenth of that at the centroid). The differences between the curves are small compared with the possible errors in much of the available experimental data on atmospheric diffusion; so, for many practical purposes, the simple linear profile may be adequate.

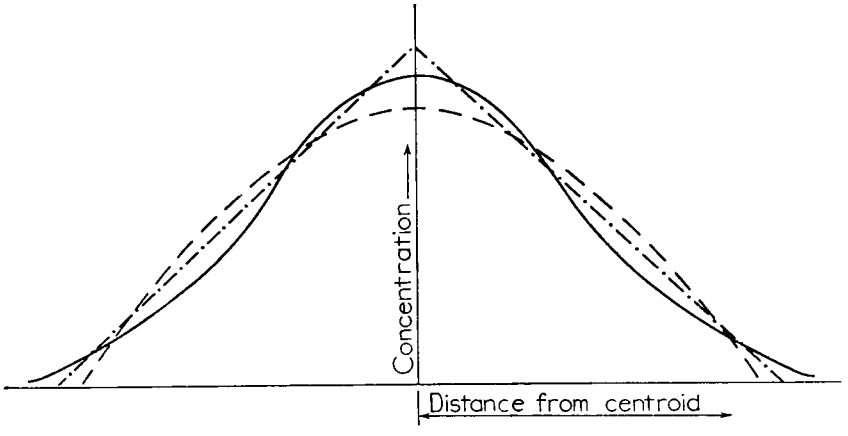

FIGURE 5. Gaussian, linear and parabolic distributions.

——— Gaussian distribution
·—·— Linear distribution
— — — Parabolic distribution

These distributions have the same zero, first and second moments. (The concentration is plotted against the distances from the centroid along the width axis of a diffusing cloud.)

9.2. Asymmetrical distributions

Experimental data on the spatial distribution of material in a diffusing cloud are seldom sufficiently detailed or accurate to reveal whether or not the distribution along a cross-wind axis is significantly asymmetric. But the variation, with time, of the concentration at a fixed point in the path of a diffusing cloud usually has marked asymmetry; as the cloud approaches the point, the concentration increases quickly towards a peak value, then decreases more slowly after the peak has passed. Therefore, in dealing with this or any

other computation in which an asymmetrical distribution is likely, the general form of the assumed profile must allow for such asymmetry. Allowance can be made easily by letting the Gaussian or linear profile have one value of its width parameter on one side of the peak and another value on the other side. For example, for the Gaussian type, with standard deviations σ_1, σ_2, we may specify that

$$\left.\begin{aligned} C &= C_Y \exp[-\tfrac{1}{2}(y-Y)^2/\sigma_1{}^2] \qquad y \leqslant Y \\ C &= C_Y \exp[-\tfrac{1}{2}(y-Y)^2/\sigma_2{}^2] \qquad y \geqslant Y \end{aligned}\right\} \qquad \ldots(85)$$

or, for the linear form

$$\left.\begin{aligned} C &= C_Y(a_1+y-Y)/a_1 \qquad -a_1 \leqslant y-Y \leqslant 0 \\ C &= C_Y(a_2-y+Y)/a_2 \qquad 0 \leqslant y-Y \leqslant a_2 \end{aligned}\right\}. \qquad \ldots(86)$$

The third moment of the distribution is required, in addition to the zero, first and second moments, in order to determine the distribution parameters. To solve the equations relating moments to the width parameters, it may be noted that the terms

$$\frac{C^2}{C^0} - \left(\frac{C^1}{C^0}\right)^2$$

and

$$\frac{C^3}{C^0} - 3\left(\frac{C^1}{C^0}\right)\left(\frac{C^2}{C^0}\right) + 2\left(\frac{C^1}{C^0}\right)^3$$

are functions of the sums and the differences of the width parameters only. Elimination of either the sum or the difference from the two equations leaves a cubic equation, with only one real root, to be solved.

9.3. Sources of finite dimensions

Source material is emitted from areas or volumes of finite dimensions, and in some problems accuracy of calculation will be inadequate if the computing problem is simplified by assuming that a dimension is infinitely long or infinitely small. In some diffusion experiments a long cross-wind line source is produced, in the hope that the cross-wind dimension can be eliminated from the experimental and computing problems. But this is not always feasible, and in order to allow greater experimental manœuvrability and to obtain adequate accuracy of calculation, proper account should be taken of the initial finite length of the source. In the past, attempts have been made to deal with this problem by integrating a continuous distribution of Gaussian profiles along the line source, but this leads to considerable computing difficulty and is not necessary. It is more practical simply to specify a uniform distribution along a section of the line. For example, the following specification could be used to describe the cross-wind distribution of material at a line source and at any downwind distance from the source:

$$\left.\begin{aligned} C &= C_Y \exp[-\tfrac{1}{2}(y-Y-\tfrac{1}{2}L)^2/\sigma^2] \qquad y \geqslant Y+\tfrac{1}{2}L \\ C &= C_Y \qquad\qquad\qquad\qquad\qquad\qquad Y-\tfrac{1}{2}L \leqslant y \leqslant Y+\tfrac{1}{2}L \\ C &= C_Y \exp[-\tfrac{1}{2}(y-Y+\tfrac{1}{2}L)^2/\sigma^2] \qquad y \leqslant Y-\tfrac{1}{2}L \end{aligned}\right\}. \qquad \ldots(87)$$

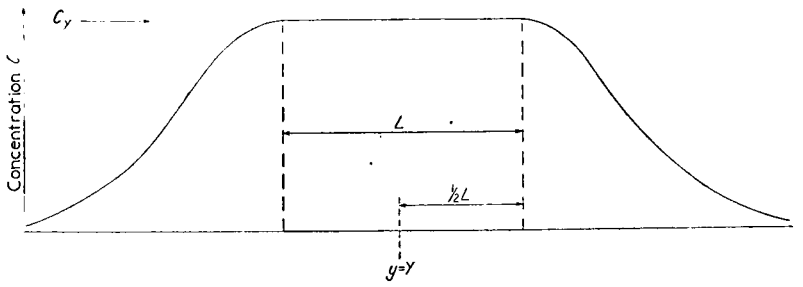

FIGURE 6. Cross-wind distribution of concentration C at any distance downwind of a line source under conditions specified in equation (87).

C_Y = concentration at $y = Y$ and is assumed uniform over the whole length L centred at $y = Y$

A Gaussian distribution is assumed at each side of L.

This distribution is illustrated in Figure 6. The initial values of σ and L are set according to a given, or assumed, specification at the line source, and at downwind distances the new values are obtained from the computed zero, first, second and fourth moments.

Instead of Gaussian distributions at the ends of the uniform section, linear or parabolic profiles may be used with computational advantage. The linear assumption at the ends is specified by

$$\left.\begin{array}{ll} C = 0 & y \geqslant Y+\frac{1}{2}L+a \\ C = C_Y(y-Y-\frac{1}{2}L-a)/a & Y+\frac{1}{2}L \leqslant y \leqslant Y+\frac{1}{2}L+a \\ C = C_Y & Y-\frac{1}{2}L \leqslant y \leqslant Y+\frac{1}{2}L \\ C = C_Y(y-Y+\frac{1}{2}L+a)/a & Y-\frac{1}{2}L-a \leqslant y \leqslant Y-\frac{1}{2}L \\ C = 0 & y \leqslant Y-\frac{1}{2}L-a \end{array}\right\}. \qquad \ldots(88)$$

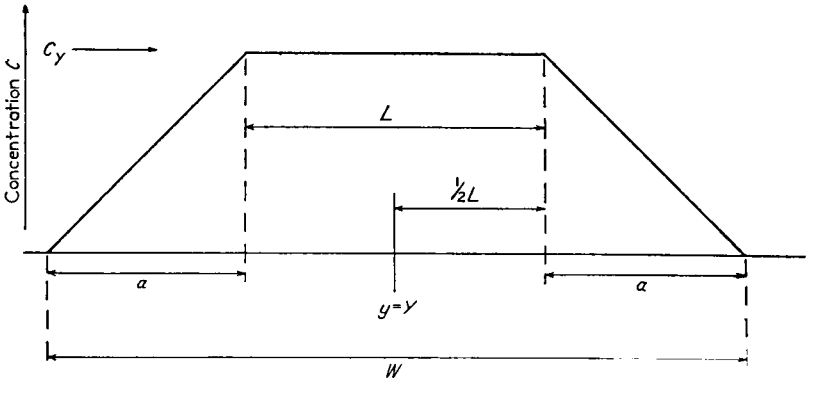

FIGURE 7. Cross-wind distribution of concentration C at any distance downwind of a line source under conditions specified in equations (89).

C_Y = concentration at $y = Y$ and is assumed uniform over the whole length L centred at $y = Y$

A linear distribution is assumed at each side of L.

The distribution is illustrated in Figure 7. The moments are given by

$$\left.\begin{aligned} C^0 &= C_Y(L+a) \\ C^1 &= YC^0 \\ C^2 &= [Y^2+(L^2+W^2)/24]C^0 \\ C^3 &= Y[Y^2+(L^2+W^2)/8]C^0 \\ C^4 &= [Y^4+Y^2(L^2+W^2)/4+(L^4+L^2W^2+W^4)/240]C^0 \end{aligned}\right\} \quad \ldots(89)$$

where $W = L+2a$.

Values of C_Y, Y, L and W from computed moments can be obtained as follows. Calculate the kurtosis, γ, from the equation

$$\gamma = \frac{\dfrac{C^4}{C^0} - 4\left(\dfrac{C^1}{C^0}\right)\left(\dfrac{C^3}{C^0}\right) + 6\left(\dfrac{C^1}{C^0}\right)^2\left(\dfrac{C^2}{C^0}\right) - 3\left(\dfrac{C^1}{C^0}\right)^4}{\left[\dfrac{C^2}{C^0} - \left(\dfrac{C^1}{C^0}\right)^2\right]}. \quad \ldots(90)$$

This should be between $\gamma = 1{\cdot}8$ when $a = 0$ and $\gamma = 2{\cdot}4$ when $L = 0$. Let $f = W/L$, which must be between 1, when $a = 0$, and ∞, when $L = 0$. Then

$$f^2 = \frac{2}{12-5\gamma}[3+\sqrt{\{3(5\gamma-9)\}}]-1, \quad \ldots(91)$$

$$L = 2\sqrt{\left\{\frac{6\left[\dfrac{C^2}{C^0} - \left(\dfrac{C^1}{C^0}\right)^2\right]}{1+f^2}\right\}}, \quad \ldots(92)$$

$$W = Lf \quad \text{or} \quad W = 2\sqrt{\left\{6\left[\frac{C^2}{C^0} - \left(\frac{C^1}{C^0}\right)^2\right]\right\}} \quad \text{when } f = \infty, \quad \ldots(93)$$

$$C_Y = 2C^0/(L+W). \quad \ldots(94)$$

Diffusion from a finite area may be dealt with either by taking moments along two different axes across the area, or by arbitrarily splitting up the area into a pattern of cross-wind strips; the along-wind width of each strip should be equal to the length of the along-wind computing steps that are to be used in the step-by-step diffusion computation. (This may not be known before the computation starts, so it is best to arrange the computing procedure so that the area may be split into strips to be dealt with after the optimum step-length has been calculated.) Moments of the distributions in each strip are then added to the computed moments at the appropriate distance from the initial upwind strip.

Finite emission-times can be dealt with by the same method but, as mentioned in Section 9.2., it may be necessary to allow asymmetry in the distribution. The moments of the distribution depicted in Figure 8 are given by (where i and j are summation indices)

$$C^m = C_Y \sum_{i=1}^{i=m+1} \left\{\frac{Y^{m-i+1}m!}{(m-i+1)!(i+1)!2^i} \sum_{j=0}^{j=i} L^{i-j}[W_2{}^j - (-1)^i W_1{}^j]\right\}. \quad \ldots(95)$$

The algebraic difficulty of determining the width parameters from the computed zero, first, second, third and fourth moments, is considerably increased by allowing this asymmetry, but an iterative method of solution is feasible with the aid of a modern, fast computer.

10. VERTICAL MOTION AND DEPOSITION

10.1. Magnitude restriction

Vertical motion can be introduced into the equations by inserting a term$(\partial/\partial z)(wC)$ into the left-hand sides of the diffusion equations, where w is the vertical velocity of the airborne material. There are several finite-difference forms for this term; one form is

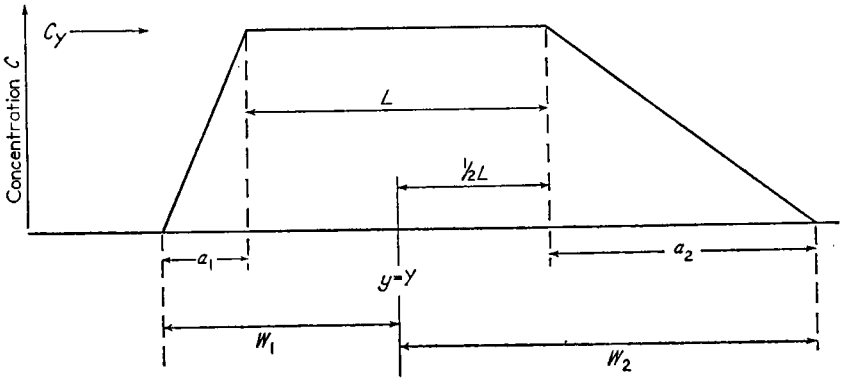

FIGURE 8. Cross-wind distribution of concentration C at any distance downwind of a line source under asymmetrical conditions (see equation 95).

C_Y = concentration at $y = Y$ and is assumed uniform over the whole length L centred at $y = Y$

$[w_r(C_{r+1}+C_r)-w_{r-1}(C_r+C_{r-1})]/2h$ for the layer r, where w_r is the vertical velocity at the boundary between layers r and $r+1$. If the vertical velocities are assumed constant in the direction along which the moments are taken, the term can be accommodated easily in the computations. However, there is a restriction on the magnitude of the specified vertical motion; computational instability is likely to arise if a vertical speed is large enough to transport a particle through a depth greater than h during a single step in the step-by-step computing procedure. In other words, if the computing step is δx in the along-wind direction and $\frac{1}{2}(u_r+u_{r+1})$ is taken as the wind speed at the interface between layers r and $r+1$, then we must have

$$\frac{2w_r\delta x}{u_r+u_{r+1}} < h \qquad \ldots(96)$$

at all levels. If the computing step is determined by equation (72), this condition becomes

$$w_r < \frac{6(u_r+u_{r+1})}{h\left[\dfrac{u_r+u_{r+1}}{K_r}\right]_{\text{maximum}}} \qquad \ldots(97)$$

and this allows a useful range of fall-speeds; for example, if $h = 10$ metres, $k = 1$ metre per second and the wind speed is constant with height, the maximum vertical velocity can

be 0·6 metres per second, which is much greater than the fall-speeds specified in most diffusion problems. If a vertical velocity does not satisfy this criterion, the computing step length must be decreased for the condition described above to be satisfied.

10.2. Application to a visibility problem

One of the problems in aviation meteorology concerns the variation in visibility observed from aircraft on the approach to runways in smoke haze. Part of this variation appears to be due to an increase of smoke particle concentration with height, from ground-level up to a few hundred feet. There are many instances of visibility decreasing rapidly with height in smoke-laden air, and the variation is often too great to be ascribed to variation in background or other optical effects. A simple but plausible model for numerical study of the problem could be formulated as follows. Suppose that the polluted airstream leaves a broad source region of pollution, with almost uniform concentration with height up to some specified lid, and that, as the smoke drifts across the countryside, deposition (including impaction) of particles reduces the concentration up to a height, H^1, that is appreciably lower than the lid on the top of the diffusion régime. The distribution of concentration below the height H^1, for various downwind distances from the source region, could be calculated with the finite-difference model up to this height H^1, with a constant concentration in the upper outer boundary layer and with the same concentration in all layers as the initial condition.

The calculation of visibility through the computed smoke concentrations poses a second part to the visibility problem. A full discussion of this part of the problem is outside the scope of this paper but one method of calculation is to determine the value of the visibility, V, in the equation

$$\frac{\int_0^{x=V} \exp(-\beta x)\,\mathrm{d}x}{\int_0^{\infty} \exp(-\beta x)\,\mathrm{d}x} = 1 - E. \qquad \ldots(98)$$

Here, E is a factor known as the 'minimum perceptible contrast' (often taken as about 0·02), and β is an extinction coefficient per unit distance, which, in air at normal temperature and pressure, and for particles of radius exceeding the wavelength of light, is given by the equation

$$\beta = 1{\cdot}6 \times 10^{-7} + \sum 2\pi R^2 N. \qquad \ldots(99)$$

In this equation the first term on the right represents the scattering due to molecules, N is the number, per unit volume, of particles of radius R, and Σ denotes summation over the range of particle sizes.

10.3. Application to clouds of falling particles

When the dispersing aerosol comprises a cloud of particles with fall-speeds varying according to a specified distribution, concentrations and dosages can be calculated approximately by arbitrarily splitting up the particle distribution into a number of groups, each with a characteristic fall-speed, and performing the diffusion computations for each

group. But the computing labour can be reduced considerably when the fall-speed distribution can be replaced by an equivalent mean fall-speed together with a form of vertical diffusion. For example, suppose that in a cloud of N particles, the number, n_w, of particles having a fall-speed of w is given by the equation

$$n_w = \frac{N}{\sqrt{(2\pi)}\sigma_w} \exp\left[-\frac{1}{2}\left(\frac{w-\bar{w}}{\sigma_w}\right)^2 \right] \quad \ldots(100)$$

where σ_w is the standard deviation of the fall-speed distribution, and $\bar{w}$ is the mean fall-speed.

If the cloud is emitted at a point source well away from boundaries in an airstream in which the vertical diffusion coefficient is zero, then, after a time, t, the distribution of particles in the vertical will be given by

$$n_z = \frac{N}{\sqrt{(2\pi)}\sigma_w t} \exp\left[-\frac{1}{2}\left(\frac{z-\bar{w}t}{\sigma_w t}\right)^2 \right] \quad \ldots(101)$$

where z denotes height measured from the emission point.

It can be shown that this distribution is the same as that of a cloud of particles, all with fall-speed $\bar{w}$, in an atmospheric diffusion régime in which the atmospheric vertical diffusion coefficient is equal to $\sigma_w{}^2 t$. Real atmospheric diffusion is superimposed on this effect. Thus, for the specified fall-speed distribution, concentrations or dosages in the cloud can be calculated by assuming that all the particles fall with the mean speed $\bar{w}$, and that the atmospheric vertical diffusion coefficients are increased by the addition of $\sigma_w{}^2 t$. This entails adding a quantity $\sigma_w{}^2 \delta t$ to the vertical diffusion coefficients at each time step, δt. For computations involving distance steps, δx, this quantity becomes $\sigma_w{}^2 \delta x/u$, where u is the wind speed along the x axis.

It should be noted that when this technique is used the optimum computing step should be calculated from equation (72), not with the initial values K_z of the vertical diffusion coefficient, but with the final values $(K_z + \sigma_w{}^2 T)$, T being the final time for which a calculation is to be made.

11. ESTIMATION OF THE DIFFUSION COEFFICIENTS

This paper is not intended to provide a method of estimating the diffusion coefficients that are needed as part of the data for diffusion calculation. Pasquill[3] and Thompson[4] have discussed methods of estimating such coefficients with the aid of wind and temperature data. But a word of warning is needed concerning the inclusion of horizontal diffusion coefficients deduced from experimental data. Fluctuations in horizontal wind components include contributions due to vertical turbulence and vertical shear in the mean wind profile. Therefore, a horizontal diffusion coefficient deduced from such data is likely to encompass effects that are dealt with by the wind shear and vertical diffusion terms of the equations, and if such a coefficient is assigned to the horizontal diffusion term then the wind shear effect will be virtually included twice in the equation. Therefore, if such a coefficient is used the wind shear term should be eliminated or considerably reduced by a weighting factor. However, comparisons between experimental and computed data have tentatively suggested that, beyond about one kilometre from a source, the wind shear effect appears

to account for most of the horizontal dispersion. As the wind fluctuation method suggested by Pasquill also accounts for some observed dispersions, it appears likely that the wind fluctuation and wind shear effect are practically synonymous.

The disadvantage of using the wind fluctuation method to assign horizontal coefficients of dispersion in the computing system, is that such coefficients have to be changed with distance from a source or with time of material in the air. A recommended procedure is to use diffusion coefficients deduced from wind fluctuations applicable to short-range dispersion and include the full effect of the wind shear term in the equation.

12. SUMMARY OF COMPUTING METHODS

If vertical derivatives in the atmospheric diffusion equations are replaced by finite differences, then moments of the equations can be determined for any plausible vertical distributions of wind and eddy diffusivities. In most diffusion problems the horizontal axes can be chosen so that not more than zero, first and second moments of the concentrations or dosage distributions are needed to present an adequate picture of the concentration or dosage patterns, although higher moments together with convenient distributions other than Gaussian allow finite sources to be dealt with adequately.

There are three methods of solving the moment equations: by a Laplace transform method, by using an analogue computer, and by a numerical prediction technique.

The main advantage of the transform method is that the separate and combined effects of wind shear and diffusion appear as separate terms in the solutions, and comparisons between these effects can be made without solving the equations completely. The eventual effect of wind and diffusion at large distances from a source can be obtained from fairly simple calculations.

The crux of the computing problem is the solution of an 'airstream' polynomial, and this is feasible with a desk computer for diffusion régimes of up to about seven layers. For the two-dimensional diffusion or zero-moment equations the remainder of the computing work is also feasible with a desk computer, but the use of higher-moment equations necessitates the calculation of derivatives of determinants within determinants, and a high-speed computer is essential to cope with such a calculation.

An electrical analogue computer is particularly suitable for the solution of equations which can be solved by the Laplace transform methods. A particular advantage of such a computer is that it can be used for simulated experiments. The solution time is fairly quick (about a minute or less) whatever the range of the diffusion problem, but a disadvantage is that most analogue computers do not have enough integrating or amplifying units to tackle problems in which many layers and several moments are required.

The numerical prediction technique is very simple in that only simple calculations are required to build up the solution. But care must be taken to ensure that the time intervals and distance intervals along which the solutions are built up are not too large; if they are, then the computations will become unstable and the errors will grow (exponentially) as the computation proceeds. Care must also be taken in choosing a suitable form of the finite-difference equation; one of the forms which appears to be most accurate, invariably leads to instability.

The work involved in the numerical prediction technique is not prohibitive for any one problem but again a high-speed computer is essential if many problems are to be solved. For this purpose a digital computer is well suited to the task.

The inclusion of vertical motion or fluxes at the boundaries, in the computing methods described, is fairly easy from the computer's viewpoint. Variable airstream conditions could also be included in the numerical prediction technique without very much trouble, but the specification of the behaviour of these atmospheric parameters is another problem not discussed, though warning is given that care should be taken to ensure that dispersion due to wind shear is not inadvertently included in a simple horizontal diffusion term.

BIBLIOGRAPHY

1. TYLDESLEY, J. B. and WALLINGTON, C. E.; The effect of wind shear and vertical diffusion on horizontal dispersion. *Q. Jnl R. met. Soc., London*, **91**, 1965, p. 158.
2. TYLDESLEY, J. B.; The solution of atmospheric diffusion equations by electrical analogue methods. *Scient. Pap., met. Off., London*, No. 22, 1965.
3. PASQUILL, F.; The determination of eddy diffusivity from measurements of turbulent energy. *Q. Jnl R. met. Soc., London*, **89**, 1963, p. 95.
4. THOMPSON, N.; Short-range vertical diffusion in stable conditions. *Q. Jnl R. met. Soc., London*, **91**, 1965, p. 175.

Printed in England for Her Majesty's Stationery Office by J. W. Arrowsmith Ltd.

Dd. 138601. K8. 5/68.

© *Crown copyright 1968*

Published by
HER MAJESTY'S STATIONERY OFFICE

To be purchased from
49 High Holborn, London W.C.1
423 Oxford Street, London W.1
13A Castle Street, Edinburgh 2
109 St Mary Street, Cardiff CF1 1JW
Brazennose Street, Manchester 2
50 Fairfax Street, Bristol BS1 3DE
258–259 Broad Street, Birmingham 1
7–11 Linenhall Street, Belfast BT2 8AY
or through any bookseller

S.O. Code No. 40-164-28